VINTAGE AIR
FRONT RUNNER
ENGINE DRIVE SYSTEMS

an ISO 9001:2015 Registered Company

Cast LS

Front Runner Installation with Cartridge-Style Water Pump

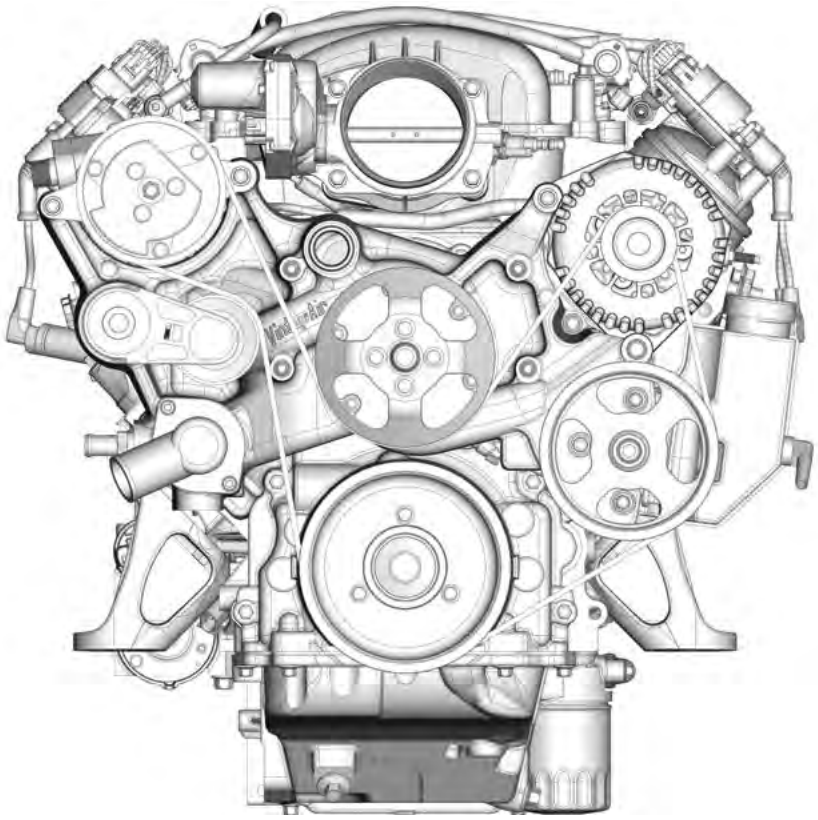

18865 Goll St. San Antonio, TX 78266
Phone: 800-862-6658
Sales: sales@vintageair.com
Tech Support: tech@vintageair.com
www.vintageair.com

Table of Contents

Cover..... 1
Table of Contents..... 2
Additional Parts & Accessories..... 3
Information Page..... 4
OEM Front Belt System Removal (If Equipped), Engine Preparation..... 5
Thermostat Installation, Heater Line Fitting Installation..... 6
Power Steering Pulley Installation (If Equipped)..... 7
Temperature Sensor Port or Plug Installation, Mounting Stud and Damper Installation..... 8
Water Pump Gasket Installation, Water Pump Casting Installation..... 9
Crankshaft Pulley Installation, Alternator Installation..... 10
Alternator Installation (Cont.), Tensioner Installation..... 11
A/C Compressor Installation, Water Pump Pulley Installation..... 12
Belt Installation..... 13
A/C Compressor Fitting Installation..... 14

Additional Parts & Accessories

The following additional parts and accessories are available for your Front Runner drive system from Vintage Air except as noted:

Power Steering Accessories

DSE Hose Kit
852008 Early GM (1965-81)
852009 Mustang II
852012 Ford Fox Body (1979-2004)
(Fox Body rack & pinion has external hardlines)

Flow Control Valve
852001 For Mustang II Rack & Pinion
(Reduces flow to 2.0 GPM)

Other Accessories

Compressor Block Fittings
342310 Front Runner TiteFit Line Kit
342311 Front Runner TiteFit Line Kit, fully polished as shown

341084 Front Runner Heater Fitting Kit with #10 male insert O-ring connections

DSE Steering Hardline
852000 TiteFit Hardline

NOTE: Pump not included with hardline (Shown for reference only).

Banjo Fitting
852010 For DSE Hose Kit
(High-pressure outlet)
Banjo Fitting
852011 For -6AN Fitting

ProLine LS Swivel Water Neck
706002 Polished aluminum designed specifically for our Front Runner applications.
707101 Stant thermostat for LS swivel water neck (Stant P/N 14948).

186 Degree

NOTE: Customer may source optional temperature sensor.

Temperature Sensor, GM P/N **12608814**

www.vintageair.com

Important Notice—Please Read

For Maximum System Performance, Vintage Air Recommends the Following:

The compressor and alternator supplied with this kit are grounded first via their respective mounting brackets, then to the engine block, and finally to the vehicle chassis. Inspect all mating surfaces to ensure a clean, metallic surface. This may require the removal of paint, corrosion or anodizing from several locations in order to complete the grounding path. In addition, the supplied 4 AWG cable or equivalent must be used to both ensure proper charging and prevent damage and/or fire.

After installation, it will be necessary to confirm the quality of the ground and power paths by measuring voltage drop between the electrical components and the battery terminals while operating the alternator at or near its rated load (refer to the diagram provided with the alternator installation instructions).

Refrigerant Capacities:

Vintage Air System: 1.8 lbs. (28.8 oz.) or 816 grams of **R134a**, charged by weight with a quality charging station or scale. **NOTE: Use of the proper type and amount of refrigerant is critical to system operation and performance. Vintage Air systems are designed to operate with R134a refrigerant only. Use of any other refrigerant could damage your A/C system and/or vehicle, and possibly cause a fire, in addition to potentially voiding the warranties of the A/C system and its components.**

Other Systems: Consult manufacturer's guidelines.

Lubricant Capacities:

New Vintage Air-supplied Sanden Compressor: No additional oil needed (Compressor is shipped with proper oil charge).

All Other Compressors: Consult manufacturer (Some compressors are shipped dry and will need oil added).

Service Info:

Protect Your Investment: Prior to assembly, it is critical that the compressor, evaporator, A/C hoses and fittings, hardlines, condenser and receiver/drier remained capped. Removing caps prior to assembly will allow moisture, insects and debris into the components, possibly leading to reduced performance and/or premature failure of your A/C system. This is especially important with the receiver/drier.

Additionally, when caps are removed for assembly, **BE CAREFUL!** Some components are shipped under pressure with dry nitrogen.

Evacuate the System for 35-45 Minutes: Ensure that system components (Drier, compressor, evaporator and condenser) are at a temperature of at least 85° F. On a cool day, the components can be heated with a heat gun ***or*** by running the engine with the heater on before evacuating. Leak check and charge to specifications.

www.vintageair.com

Important Information Before Beginning:

- **Read instructions completely and thoroughly before installing the Vintage Air Front Runner system. Follow instructions step-by-step for proper installation.**
- **The damper requires specialized tools for removal and installation. If the proper tools cannot be acquired, Vintage Air recommends having a trained professional perform the removal and installation. Refer to the manufacturer's instructions included with the damper.**

Required Tools:		
(GM OEM P/N)	J 41816	Crankshaft balancer remover or equivalent
	J 41816-2	Crankshaft end protector or equivalent
	J 42386	Crankshaft holding tool or equivalent

- **All threaded holes used as mounting provisions in the engine block should be checked for thread damage and chased/repaired as necessary.**
- **Front Runner system designed for the LS2-style thermostat. Three options include Stant P/N 14948, 186F, available from Vintage Air as P/N 707101; Stant P/N 14946, 160F, not stocked by Vintage Air; or GM P/N 12600172, 185F, not stocked by Vintage Air**
- **Anti-seize must be used on all bolt threads, or mechanical locking will occur, preventing removal of nuts from bolts and causing damage to fasteners.**

OEM Front Belt System Removal (If Equipped)

Perform the Following:

1. Disconnect the negative battery cable.
2. Drain the radiator.
3. Remove the fan and belts.
4. Remove the alternator and A/C compressor.
5. Remove the damper.
6. Remove the OEM water pump and thermostat assembly from the OEM water pump (if reusing thermostat).

Engine Preparation

1. Clean all mating surfaces, and remove any dirt, grease or burrs.
2. Clean the damper hub and snout.
3. Wipe a thin coat of oil on the crank snout.
4. When using an LS7 timing cover, it may be necessary to grind the top of the (2) bosses shown to allow clearance for the main casting (See Photo 1, below).

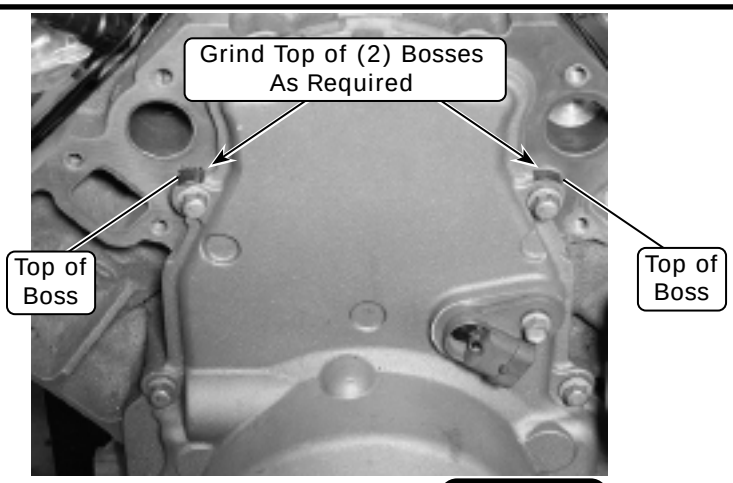

Photo 1

Thermostat Installation

1. Several installation steps are most easily performed on the bench, beginning with the thermostat. Carefully cut clocking tab from circumference of thermostat seal. Align thermostat in casting bore as shown in Figure 1, below. Install thermostat housing to casting using (2) M6-1 x 16 socket head cap screws provided with housing, torqued to 5 lb-ft.

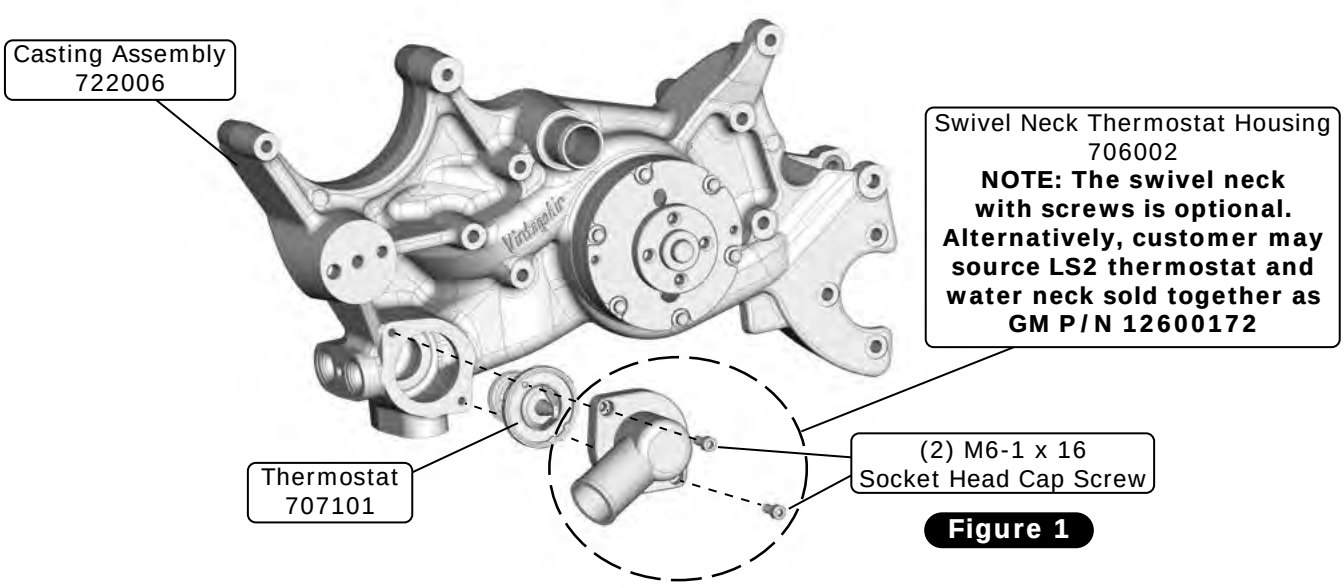

Figure 1

Heater Line Fitting Installation

1. Two pairs of heater ports are provided in the casting for maximum flexibility in routing heater lines. Both are near the lower, passenger-side corner of the casting, one on the side and one on the bottom. Slide (2) O-rings onto pilots on rear of block. Grease may be used to help hold O-rings in place if they are bumped during block installation. Install the heater barb block fitting onto the heater pad as shown in Figure 1, below. Torque block retaining screw to 15 lb-ft. Install (2) NPT pipe plugs into the other pair of threads. **NOTE: Vintage Air recommends use of customer-sourced Permatex 80631 Thread Sealant with PTFE on all NPT connections, which will also inhibit galling. Customer may opt to reverse positions of block and plugs from configuration shown.**

2. Optional O-ring block fitting kit 341084 replaces standard barb block fitting kit 341087, and can be installed at either port position. Pipe plugs would seal unused ports as noted above.

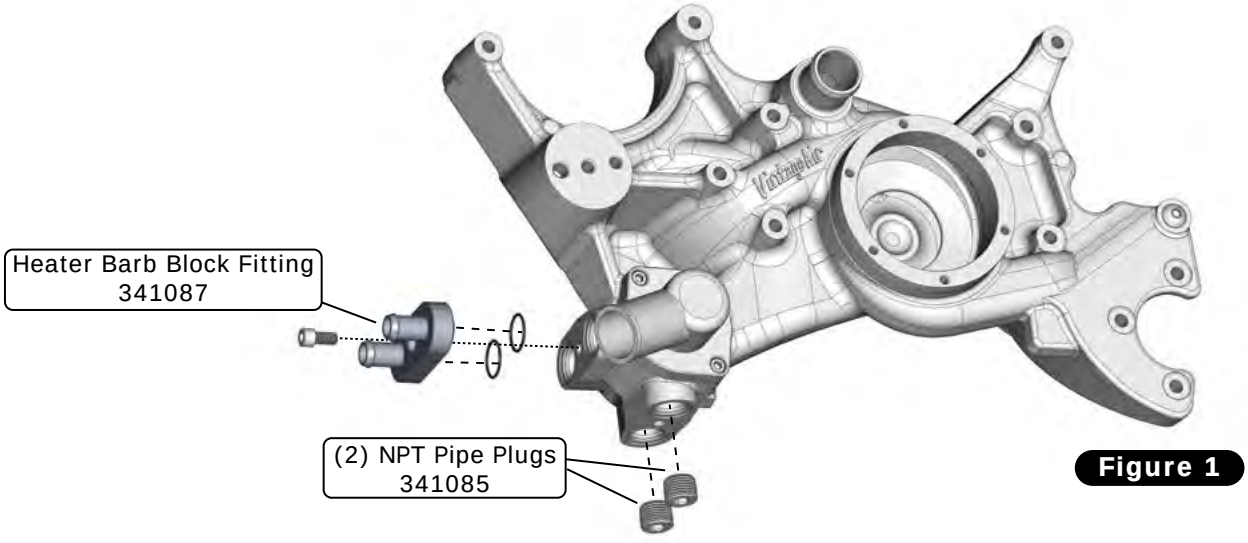

Figure 1

www.vintageair.com

Power Steering Pump Installation (If Equipped)

WARNING: The pulley must be installed with the proper tool (K-D Tool 2897 or equivalent). Do not attempt to hammer or press the pulley onto the power steering pump shaft! Failure to use the proper tool will destroy the pump.

NOTES:

- **A high-pressure fitting (not included with this kit) is required for hose connection. Several options are available through Vintage Air (See Additional Parts & Accessories on Page 3 of this instruction booklet).**
- **Standard power steering pump flow rate is 3.0 to 3.4 gallons per minute at 1500 RPM. For rack-and-pinion systems that require a lower flow rate, a flow control valve (Vintage Air P/N 852001) may be purchased to reduce the flow to 2.0 GPM (See Additional Parts & Accessories on Page 3).**
- **To ensure the functionality and longevity of the power steering pump, proper bleeding of the system is required at the time of installation. See the attached document for power steering system bleeding instructions.**

1. Using a power steering pump pulley installer, install the power steering pulley onto the power steering pump (See Figure 1, below). Press power steering pulley onto pump shaft until back of pulley bottoms out on front of pump bearing. Confirm 3.210" measurement from back side of pulley to rear of pump.

2. With pump body located behind main casting, align mounting holes of pump and casting and secure top and bottom holes with 5/16-18 x 3 ½" 12-Pt SS bolts, washers and lock nuts as shown in Figure 2, below, torqued to 22 lb-ft.

3. Secure 9:00 mounting hole with M8-1.25 x 35 12 point SS screw, torqued to 22 lb-ft.

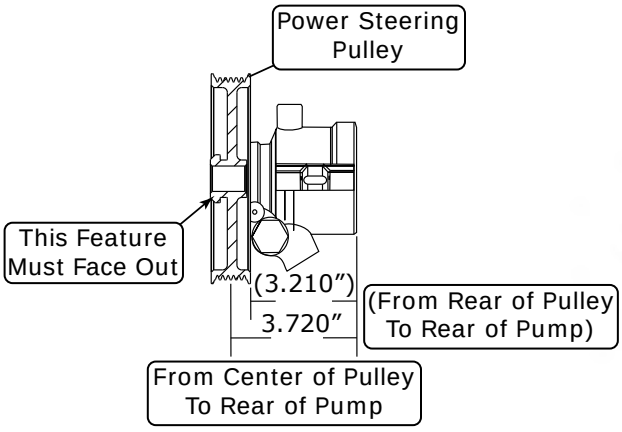

Figure 1

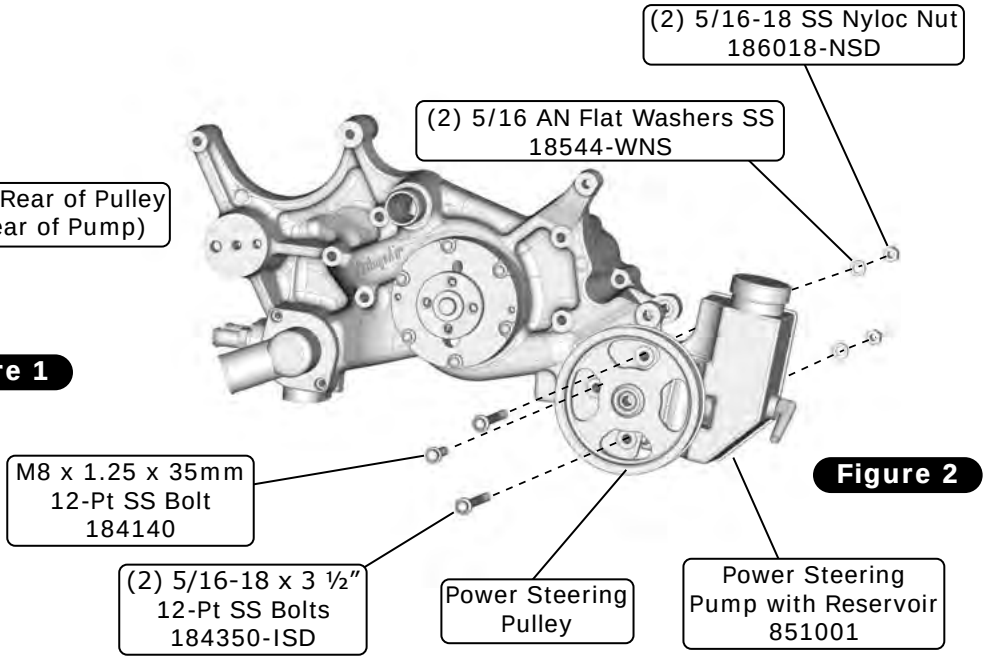

Figure 2

Temperature Sensor Port or Plug Installation

1. For systems not employing temperature sensor, plug sensor port on rear of casting using M12-1.5 x 16 hex bolt and copper sealing washer torqued to 10 lb-ft using 19mm thin walled deep well socket (See Figure 1, below).
2. For systems employing customer sourced GM P/N 12608814 temperature sensor with integral copper sealing washer, thread sensor into port and torque to 10 lb-ft using 19mm thin walled deep well socket. Discard M12 bolt and sealing washer provided in hardware kit.

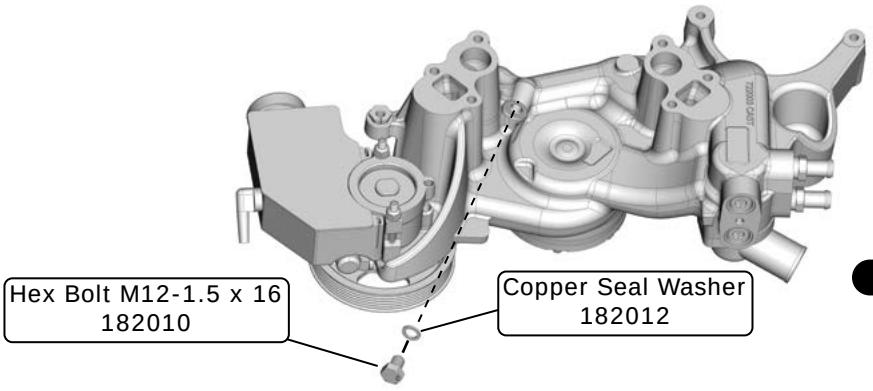

Figure 1

Mounting Stud and Damper Installation

NOTE: All "LS7" engines were shipped from GM with a factory-installed dry sump oiling system. This system used a unique timing cover and an extended crankshaft snout, which was different from all other LS engine configurations. Vintage Air offers a special Front Runner system for LS7 engines that still retains the factory-installed dry sump oiling system, labeled "LS7." Many engine builders convert LS7 engines to wet sump configuration by replacing the pump, timing cover, oil pan, and sometimes the crankshaft. These converted engines should use the standard "LS Series" Front Runner system, but will also need a crankshaft spacer P/N SDLS7SPCR, available from Scoggin Dickey, if the stock LS7 crankshaft is retained. GM P/N 19420191 LS7 Wet Sump crate engine uses a similar spacer. On these conversions, the order of part removal is reversed for installing the Front Runner Crankshaft Balancer. Machining of the spacer might be necessary to fit inside the hub of the balancer before installing the crankshaft bolt. Never machine the hub.

1. Install the new damper and crankshaft bolt as shown in Figure 1, below. **NOTE: Refer to the instructions included with the damper.**
2. Install (5) M8-1.25 x 147mm studs in all but the M8 hole farthest to the driver side as shown in Figure 1, below.
3. End of studs should protrude 5.08 inches from face of block.

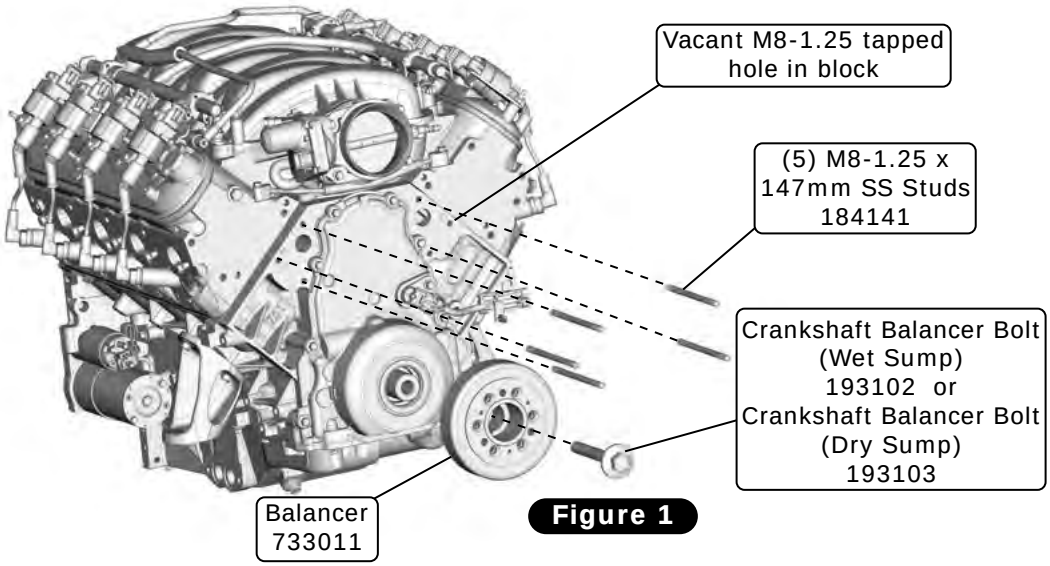

Figure 1

Water Pump Gasket Installation

1. Install (2) gaskets, free of lubricant or sealant, over studs (See Figure 1, below).

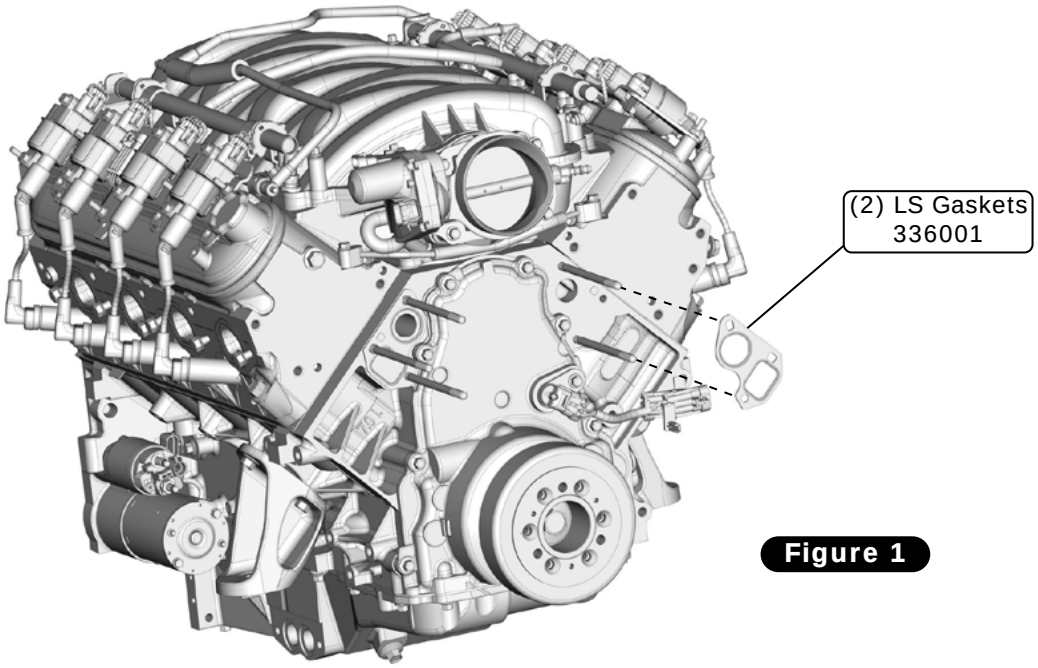

Figure 1

Water Pump Casting Installation

1. Slide casting onto studs.

2. Secure with (5) M8 12-Pt SS nuts torqued to 22 lb-ft and in the vacant driver side mounting hole, (1) M8-1.25 x 60 mm 12-Pt SS bolt, also torqued to 22 lb-ft (See Figure 1, below). **NOTE: Use anti-seize on all stainless hardware.**

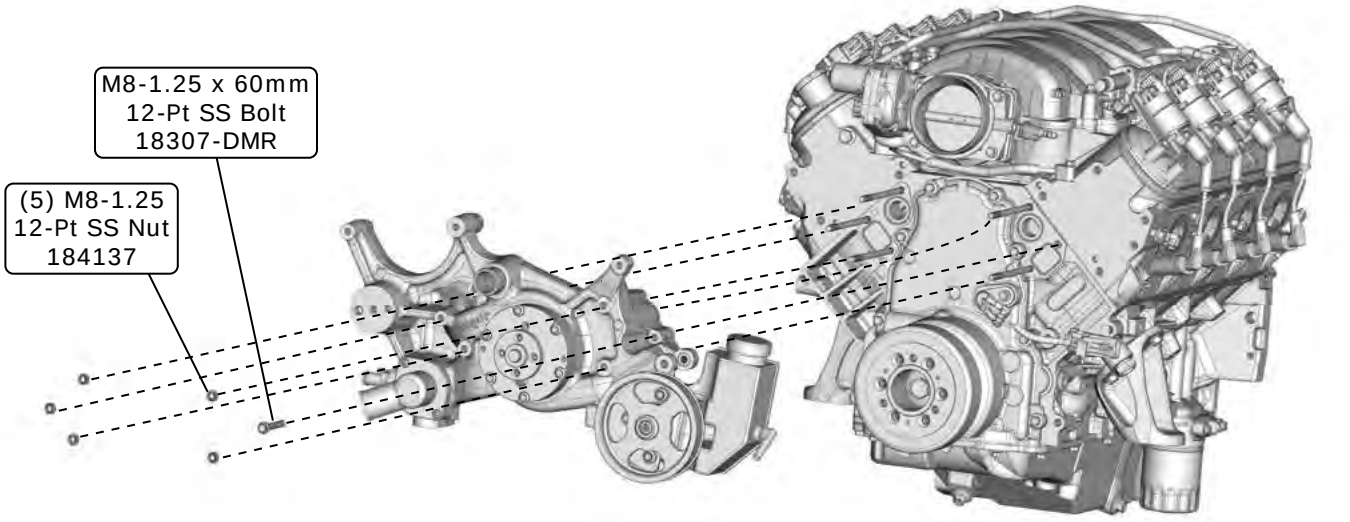

Figure 1

Crankshaft Pulley Installation

1. Install the crankshaft pulley onto the damper using (3) 3/8-16 x 1 ¼" bolts as shown in Figure 1, below. Torque to 28-30 lb ft.

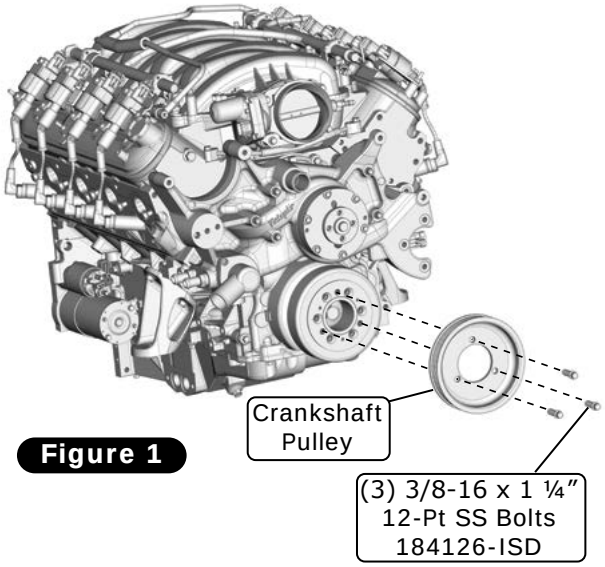

Figure 1

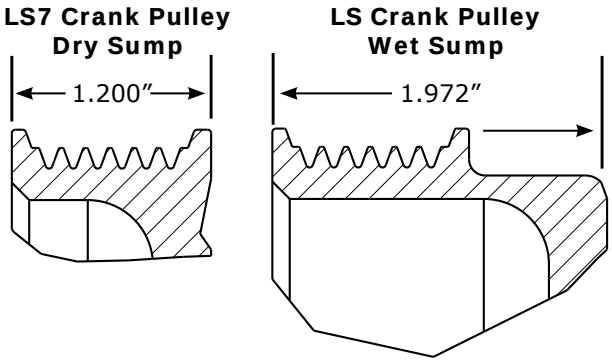

Cross Section View

Alternator Installation

1. Install alternator onto casting as shown in Figure 1, below.

2. In order to package Front Runner as closely to engine block as possible, rear of alternator is very close to driver-side head. Alternator has (3) small screw threads protruding from back. Since thread lengths can vary slightly, with Front Runner main casting installed, perform clearance check between protruding alternator threads and head, grinding thread(s) shorter as required to allow alternator to slide easily between installed Front Runner casting and head. This modification will have no impact on alternator performance, but to ensure proper alignment of Front Runner system to block, main bracket must be installed prior to alternator installation.

3. Secure upper alternator ear using M8-1.25 x 35 12-Pt SS bolt torqued to 22 lb-ft.

4. For system **with power steering**, secure lower alternator boss with 3/8-16 x 3 ¼" 12-Pt SS bolt torqued to 37 lb-ft (See Figure 1, below).

5. Torquing 3/8-16 bolt will cause threaded bushing in rear ear of casting to slide forward to capture lower alternator boss (See Figure 2, below).

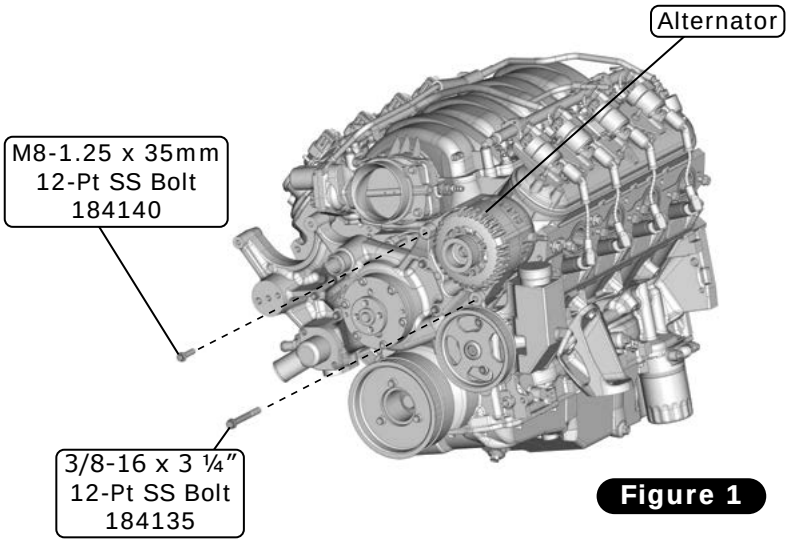

Figure 1

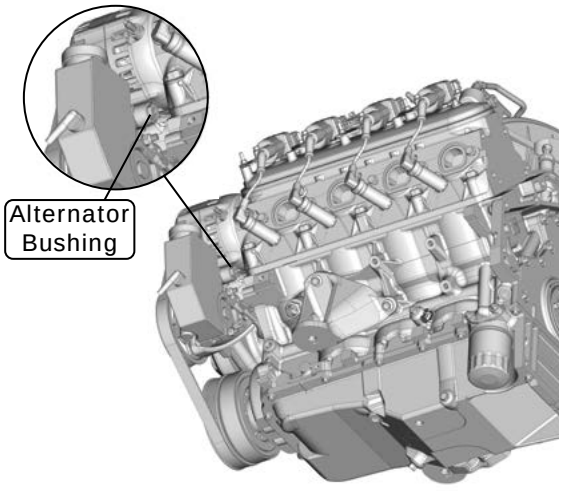

Figure 2

Alternator Installation (Cont.)

6. For system **without power steering**, secure lower alternator boss with 3/8-16 x 3 ¼" button head SS bolt torqued to 15 lb-ft (See Figure 3, below).

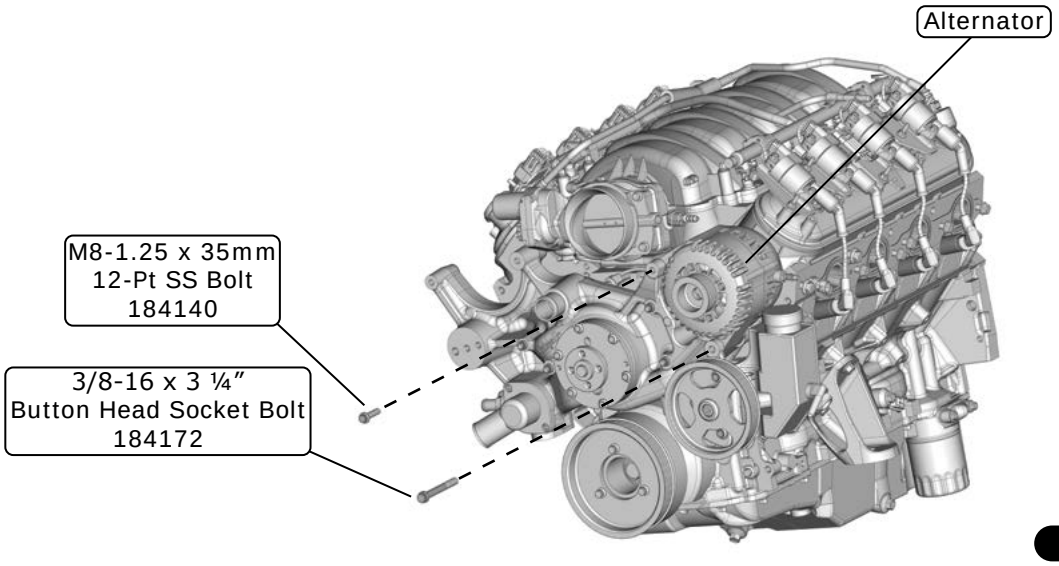

Figure 3

Tensioner Installation

1. Align tensioner pins with holes in casting as shown in Figure 1, below. Secure tensioner with 10mm washer and 3/8-16 x 2 ¾" SS hex bolt torqued to 21 +/-2 lb-ft (See Figure 1, below).

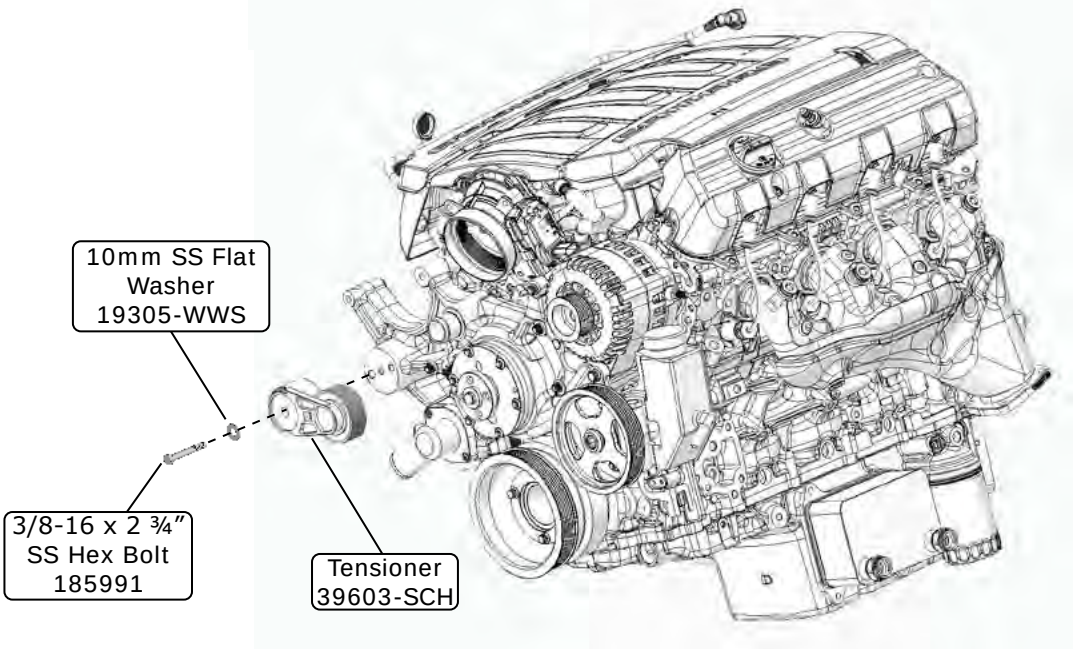

Figure 1

A/C Compressor Installation

1. Install the A/C compressor as shown in Figure 1, below.
2. Slide outboard 5/16-18 compressor mounting bolt through outboard casting bosses and compressor mounting boss first. Compressor clutch pulley will be sitting on tensioner pulley, causing inboard compressor boss centerline to be sitting slightly above mating boss centerlines in casting.
3. Push downward on top of compressor to pivot compressor downward while deflecting tensioner until inboard mounting holes in compressor and casting align.
4. Slide second 5/16-18 compressor mounting bolt in place, leaving tensioner partially loaded.
5. Secure both mounting bolts with 5/16" washers and nuts as shown. **NOTE: Installation of belt later in this instruction will create adequate clearance between compressor and tensioner pulleys.**

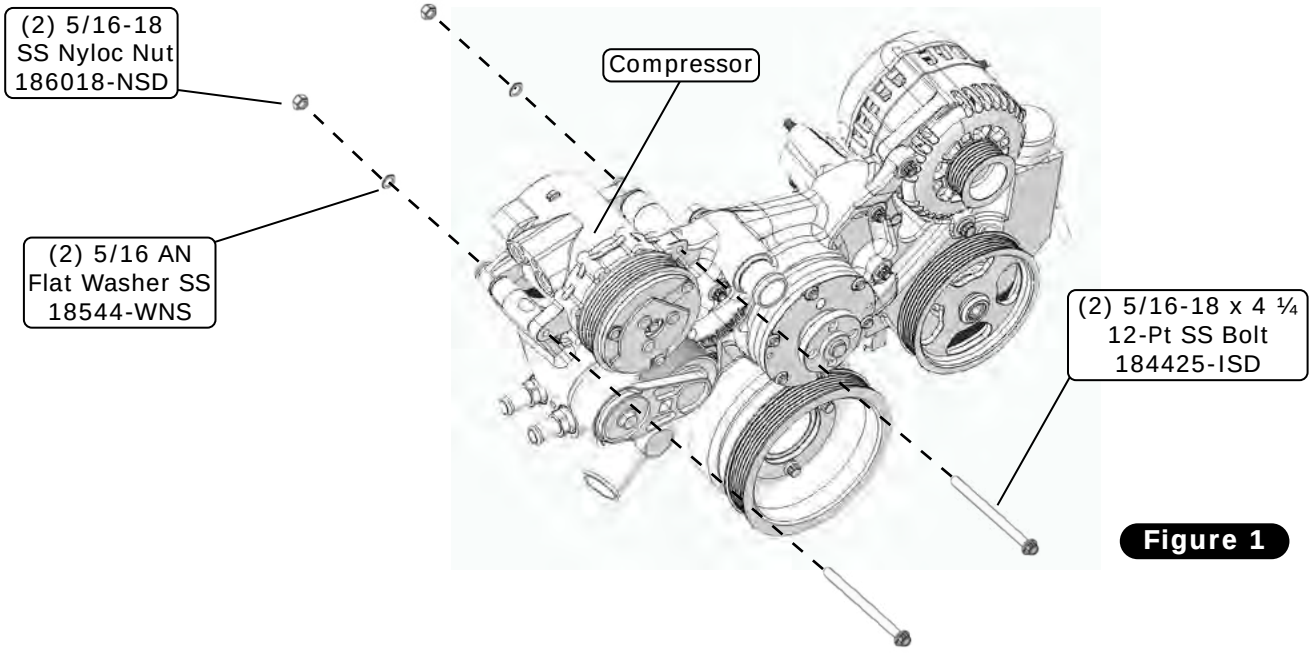

Figure 1

Water Pump Pulley Installation

1. Install the water pump pulley onto the water pump using (4) 5/16-24 x 3/4" bolts as shown in Figure 1, below. Torque to 22 lb ft.

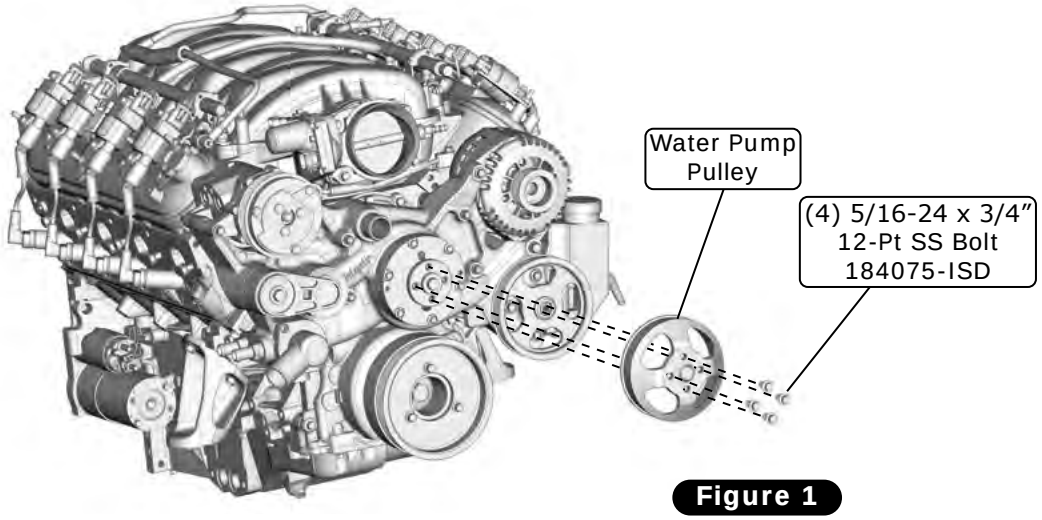

Figure 1

Belt Installation

1. Insert a 1/2"-drive ratchet or breaker bar into the socket on the tensioner, and rotate it clockwise to the tensioner stop. **NOTE: Do not force tensioner beyond stop or damage will occur.** Route the belt around the crankshaft pulley, power steering pulley and alternator, and over the compressor. Finally, pull the belt down and slide it under the water pump pulley (See Figures 1 and 2, below). Belt will be a snug fit passing over the lip of the water pump pulley.

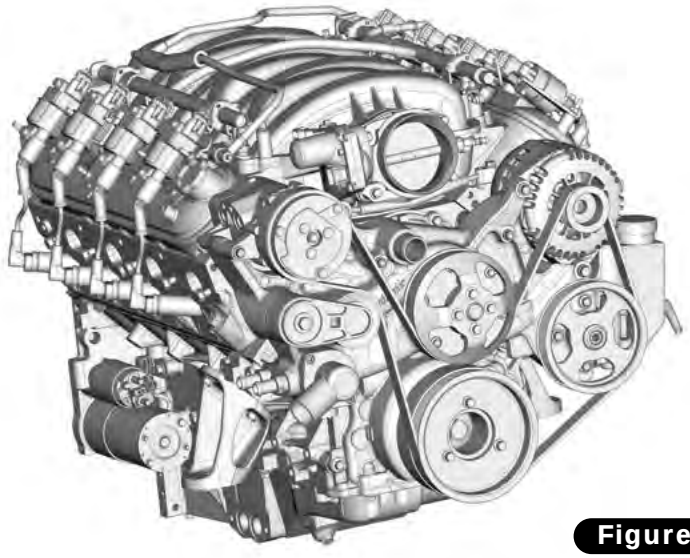

Figure 1

67.75" Belt
(With Power Steering)
726600

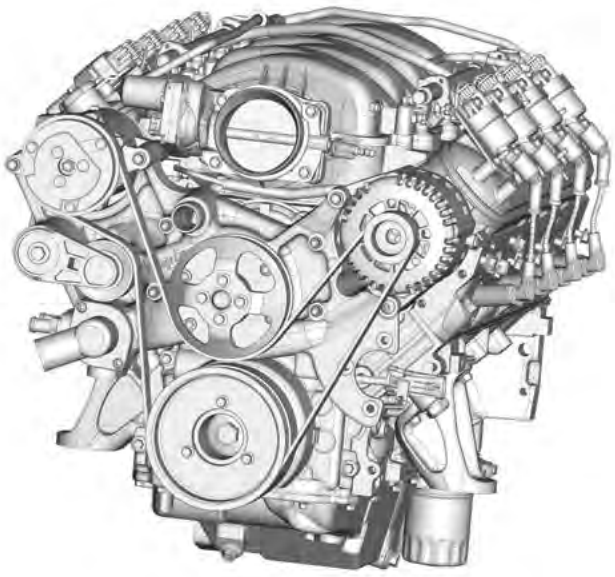

65.5" Belt
(Without Power Steering)
726601

Figure 2

A/C Compressor Fitting Installation

1. Install the block fitting onto the compressor using (2) M8-1.25 x 20mm SS socket cap screws as shown in Figure 1, below. Torque to 15 lb-ft. **NOTE: Keep the ports sealed with caps until the A/C circuit has been completed.**

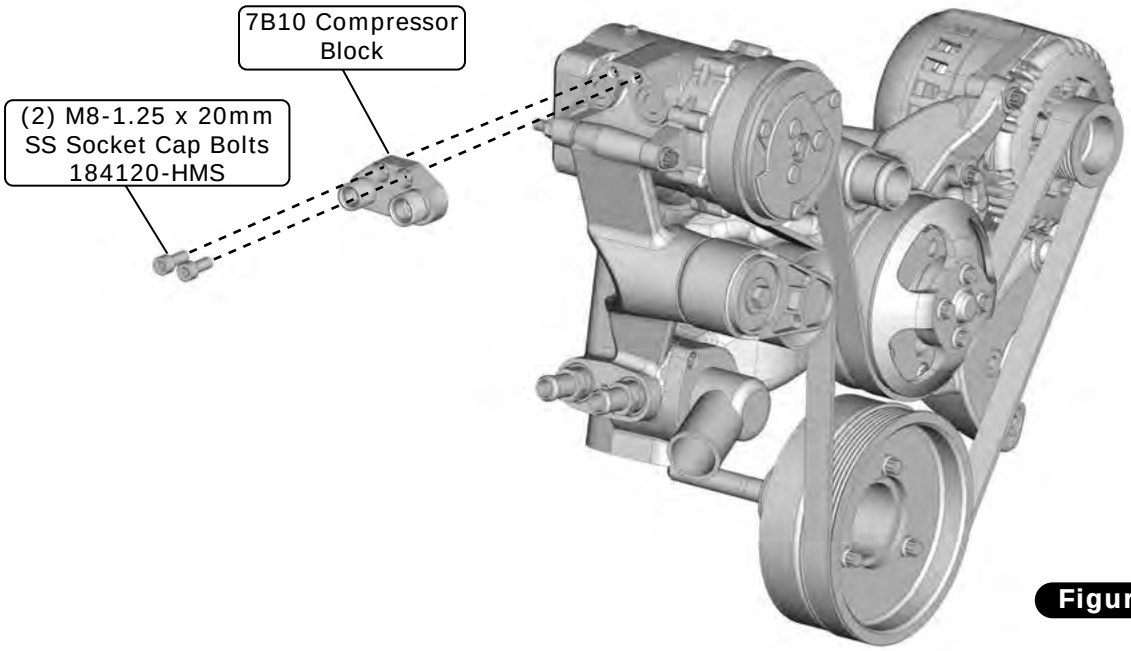

Figure 1

www.vintageair.com

Packing List: Chrome Front Runner™ Kit (175024) GM LS Wet Sump without Power Steering

No.	Qty.	Part No.	Description	
1.	1	722006	Casting, Front Runner, LS with Water Pump Cartridge	
2.	1	733041	Pulley, Water Pump, Chrome	
3.	1	733011	Damper, Front Runner	
4.	1	733102	Pulley, Crankshaft, Chrome	
5.	1	39603-SCH	Tensioner	
6.	1	398002	Tensioner Cover Assembly, Chrome	
7.	1	042918	Alternator, 170-Amp, Chrome	
8.	1	220013	Alternator Cable Kit	
9.	1	046770	Compressor, 6.1 CID Drilled Multi-Groove, Chrome	
10.	1	045005	Compressor Block, Polished	
11.	1	044095	Clutch Cover Assembly, Chrome	
12.	1	726601	Belt, 65.535" Outer Circumference Serpentine	
13.	2	336001	Gasket, Water Pump	
14.	1	193102	Bolt, LS Damper	
15.	1	341087	Heater Barb Block Fitting Kit	
16.	1	199015	Hardware Kit, Front Runner	
17.	1	904021	Instructions, LS Front Runner	

Checked By: _____
Packed By: _____
Date: _____

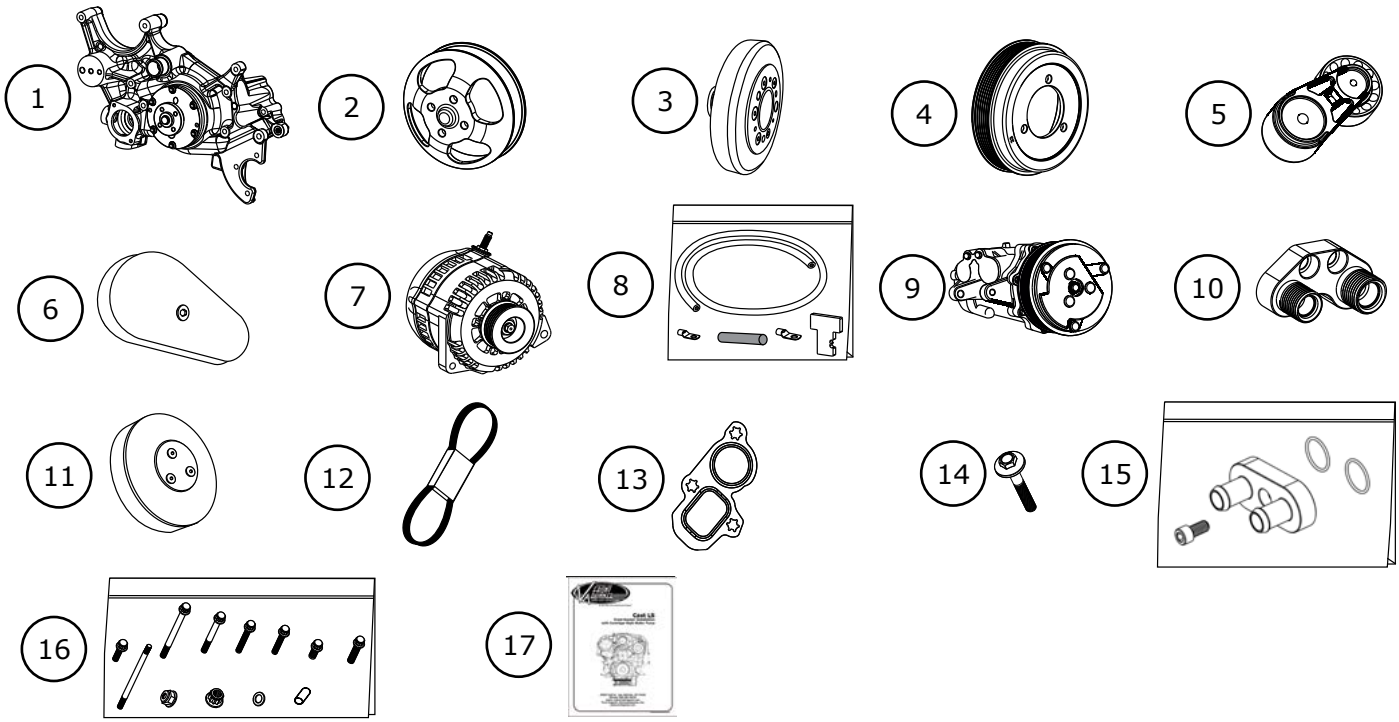

NOTE: Images may not depict actual parts and quantities.
Refer to packing list for actual parts and quantities.