an ISO 9001:2008 Registered Company

1956 Ford Passenger Car

Control Panel Conversion Kit
(473150)

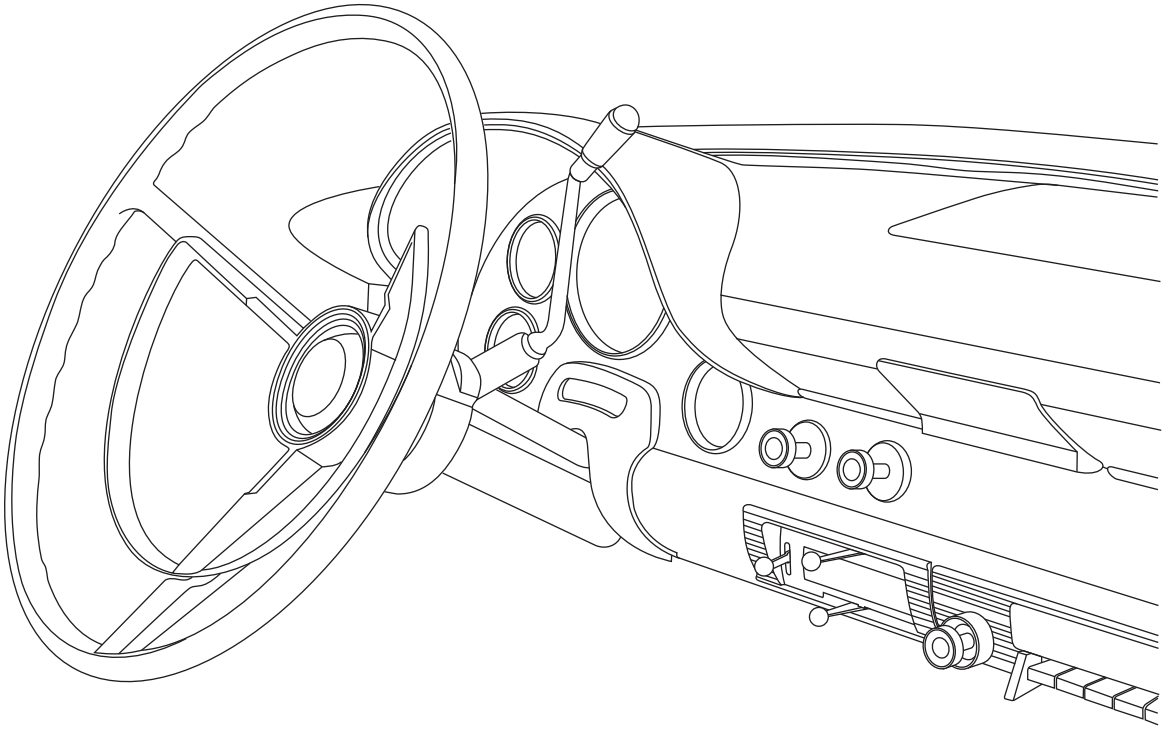

18865 Goll St. San Antonio, TX 78266
Phone: 210-654-7171
Fax: 210-654-3113
www.vintageair.com

www.vintageair.com

Table of Contents

Thank you for purchasing this control panel kit from Vintage Air. When installing these components as part of a complete SureFit™ system, Vintage Air recommends working from front to back on the vehicle, installing the condenser kit, hose kit, and compressor first, followed by the wiring, evaporator, and finally the control panel.

Other Vintage Air parts available for 1956 Ford Passenger Cars:

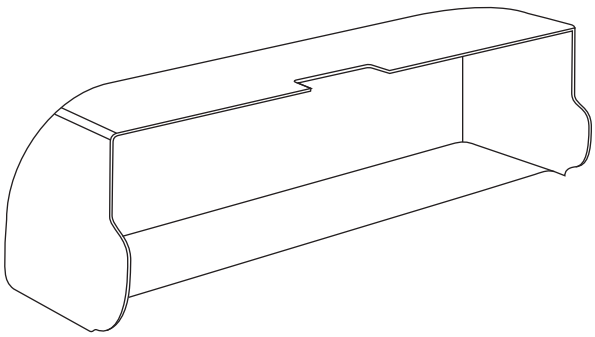

Glove Box
496143

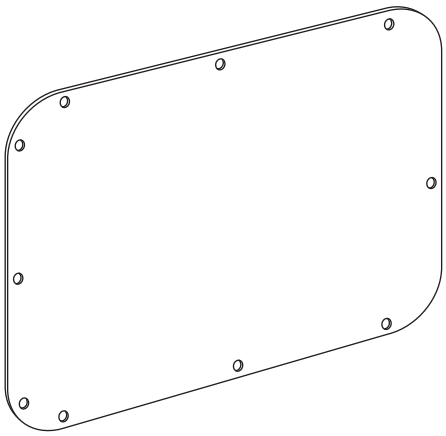

Firewall Plate
648232

www.vintageair.com

Packing List:
Control Panel Kit (473150)
1956 Ford Passenger Car

No.	Qty.	Part No.	Description
1.	1	642058	Switch Assembly, Control Panel Blower
2.	1	642056	Bracket, Mode Plate
3.	1	642055	Bracket, Mode Lever
4.	2	112002-SUA	Cable Converter Assembly
5.	2	491010-VUR	Clamp, Cable Converter
6.	1	49705-VUI	Spacer, 1/8" Nylon
7.	2	18123-VUB	Washer, 3/16" x 1/2", Flat
8.	1	18250-VUB	Screw, 10-32 x 1/2"
9.	1	18147-VUB	Locknut, 10-32 Nylon
10.	3	18413-VUB	Screw, 4-40 x 3/8"
11.	3	18412-VUB	Nut, 4-40 Nyloc
12.	1	246110-PUA	PC Board Assembly, 3-Speed Blower Switch
13.	1	232002-VUA	Control Harness, Gen IV Universal
14.	5	21301-VUP	Tie Wrap, 4"
15.	1	231520	Ground Wire

**** Before beginning installation, open all packages and check contents of shipment. Please report any shortages directly to Vintage Air within 15 days. After 15 days, Vintage Air will not be responsible for missing or damaged items.**

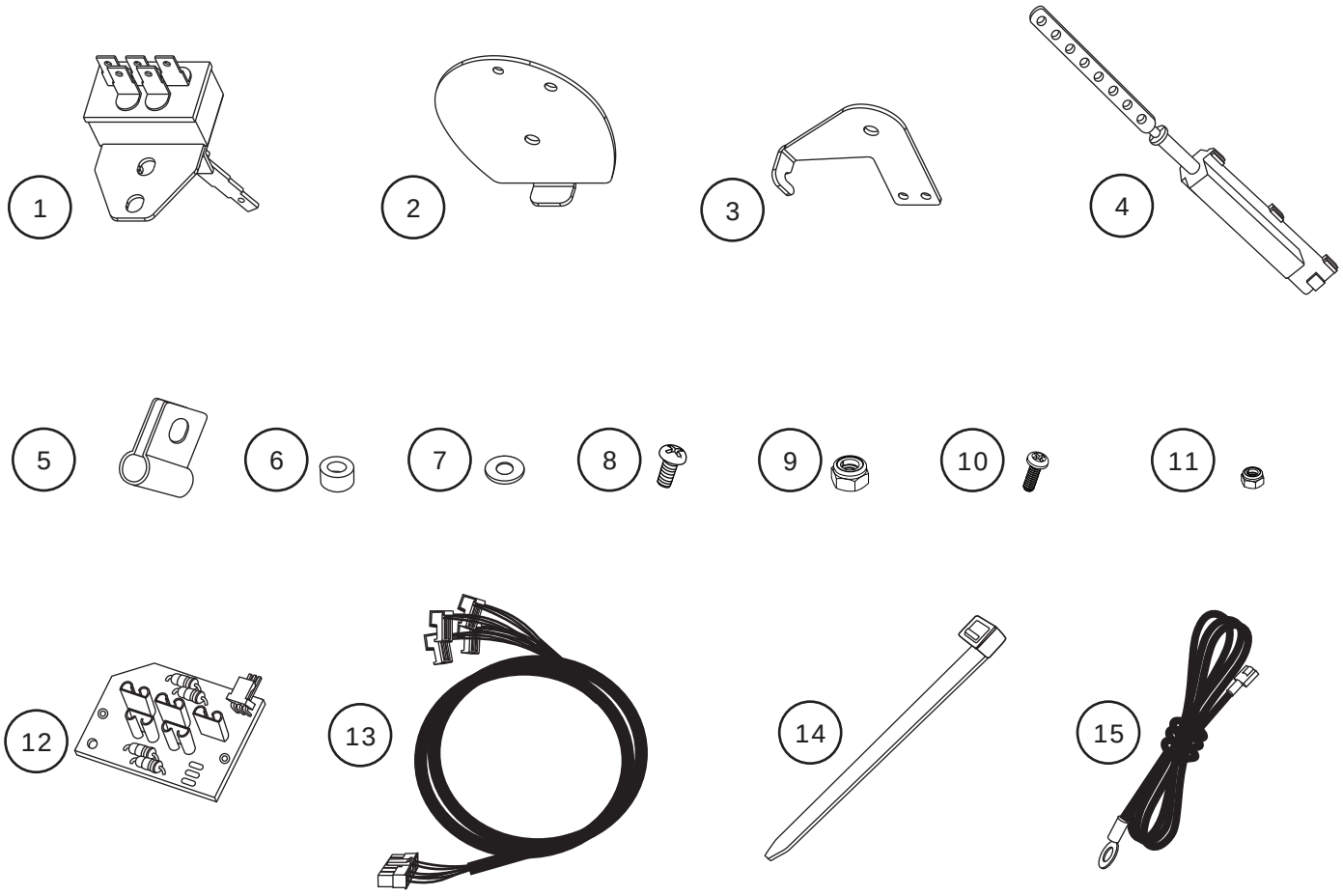

NOTE: Images may not depict actual parts and quantities. Refer to packing list for actual parts and quantities.

www.vintageair.com

Removing OEM Control Panel

Perform the Following:

1. Remove (2) 1/4-20 OEM nuts attaching the control panel to the dash (retain). See Figure 1 and Photo 1, below.
2. Disconnect all cables and wires from the back side of the OEM controls (discard, but retain hardware).
3. Remove the OEM control panel (retain).
4. Remove the OEM blower speed and mode control knobs (retain).
5. Remove the OEM retaining spring and washer from the bottom of the control panel as shown in Photo 2, below (discard).
6. Remove the mode control lever from the control panel (retain).
7. Remove the OEM screw on the back of the blower switch bracket as shown in Photo 3, below (retain).
8. Remove the OEM blower switch (discard).

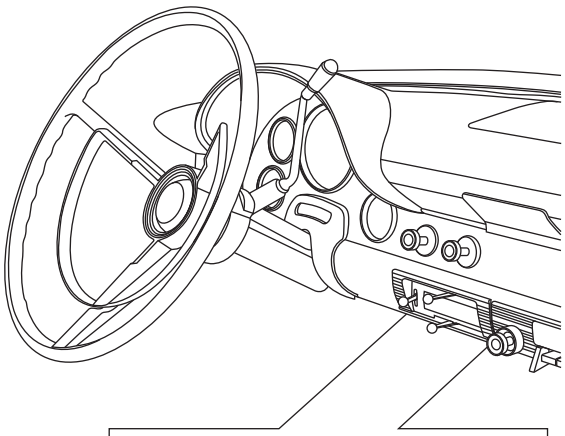

Figure 1

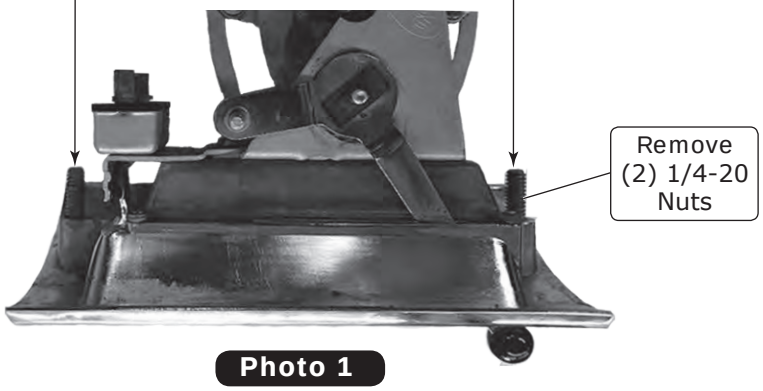

Photo 1

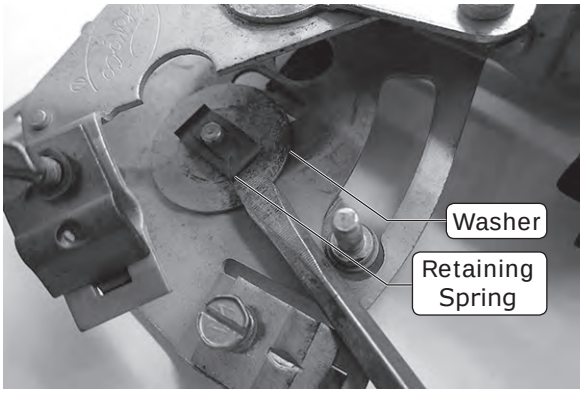

Photo 2

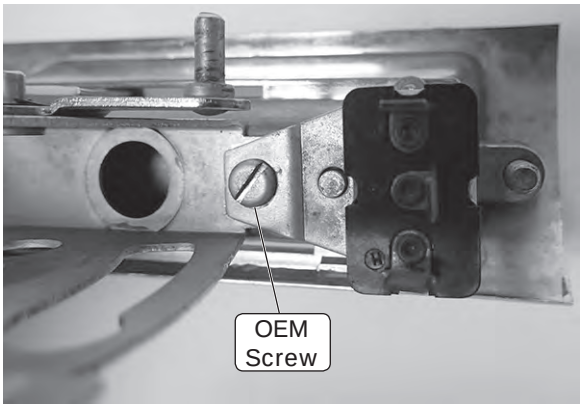

Photo 3

www.vintageair.com

Mode Control Lever Modification

1. Separate the mode control lever from the factory cable adapter by grinding off (2) rivets from the factory cable adapter as shown in Photo 4, below. **NOTE: Discard the factory cable adapter.**
2. Assemble the mode control lever with the mode lever bracket using (2) 4-40 screws and (2) 4-40 nuts as shown in Photos 5 & 6, below. **NOTE: Make sure the nuts face opposite the bent portion of the bracket as shown in Photo 6, below.**
3. Insert a 10-32 screw through the hole in the mode lever bracket. Slide a 1/8" nylon spacer onto the screw as shown in Photo 7, below.
4. Install the mode lever bracket assembly into the mode plate with the bent portion of the lever and plate facing downward as shown in Photo 8, below.
5. Screw on a 10-32 nut as shown in Photo 9, and tighten until seated. Then, back the nut off a 1/4 turn. **NOTE: Do not overtighten the nut, as this will cause the controls to bind.**

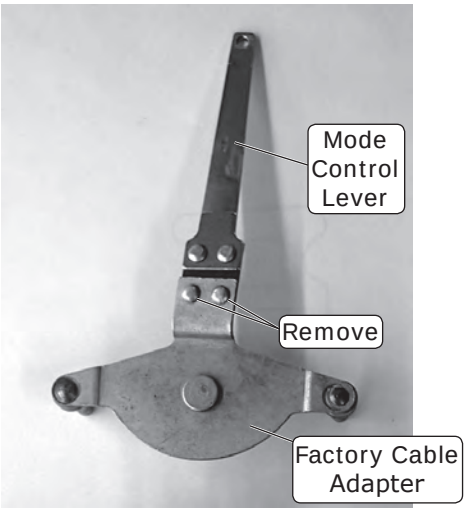

Photo 4

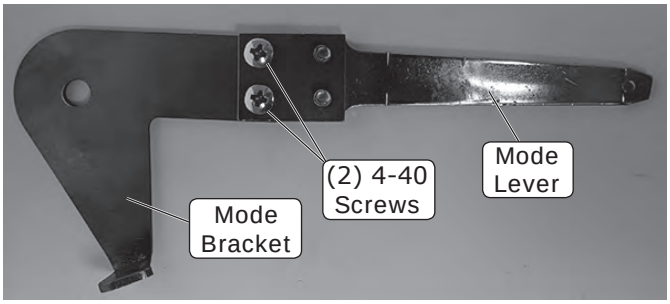

Photo 5

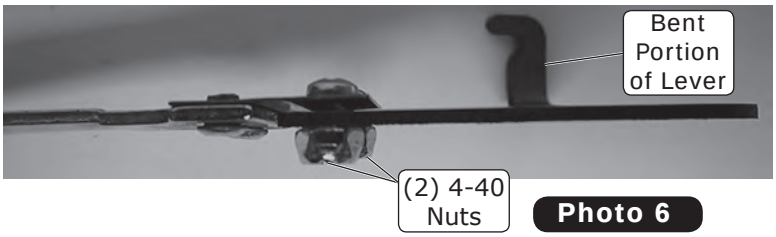

Photo 6

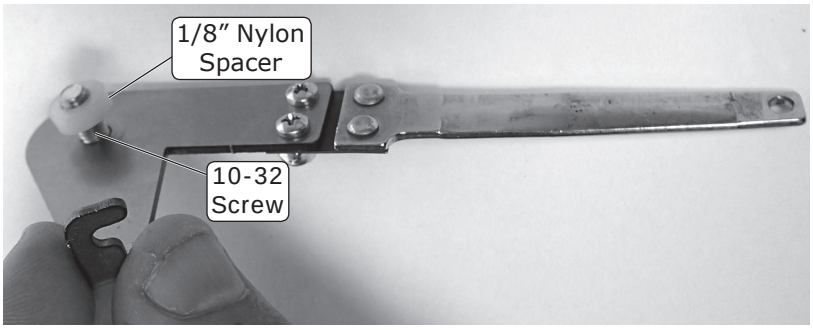

Photo 7

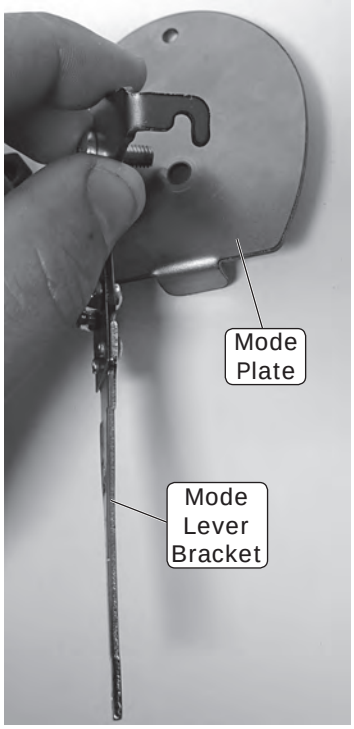

Photo 8

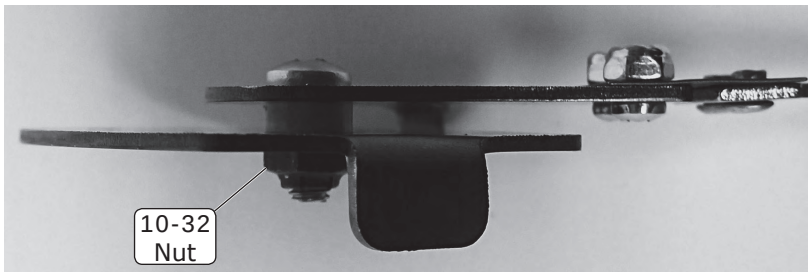

Photo 9

Mode Control Lever Modification (Cont.)

1. Insert the mode lever assembly into the control panel through the front bezel slot as shown in Photo 10, below.
2. Insert the bent portion of the base plate into the existing hole on the control panel as shown in Photo 11, below.
3. Using the base plate hole located in the rear center portion of the bracket as a reference, mark and drill a 7/64” hole into the control panel as shown in Photo 12, below. **NOTE: Remove the mode lever assembly from the control panel before drilling.**
4. After drilling the hole, insert the mode lever assembly back into the control panel through the front bezel slot. Secure the mode lever assembly to the control panel using a 4-40 screw and 4-40 nut as shown in Photo 13, below.

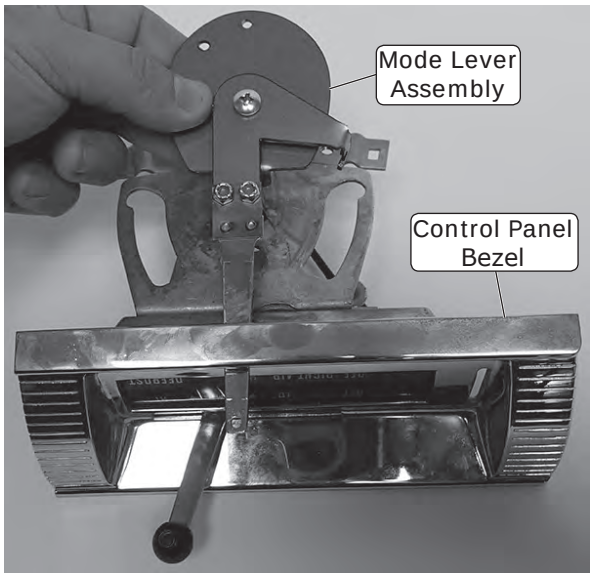

Photo 10

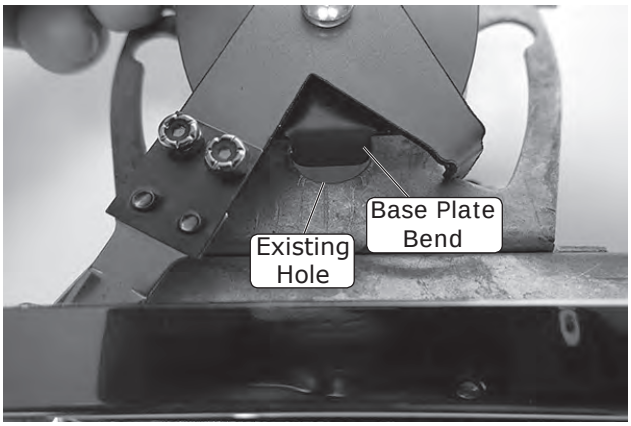

Photo 11

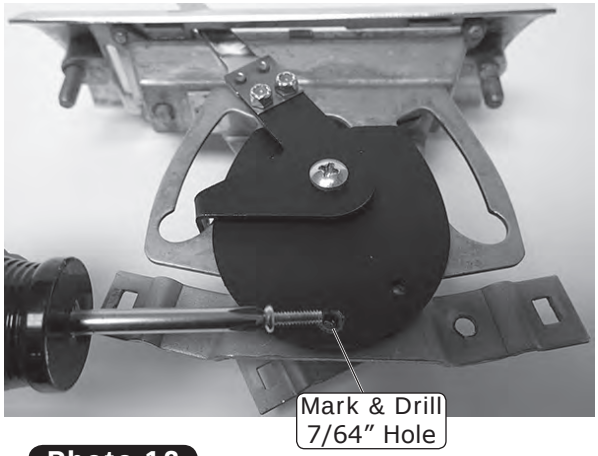

Photo 12

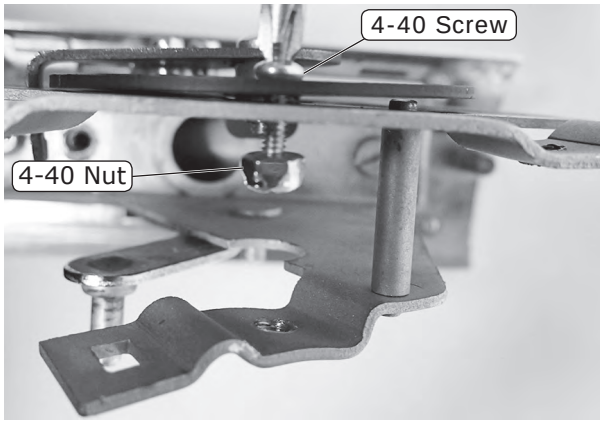

Photo 13

Cable Converter Assembly Modification

1. Locate the (2) cable converter assemblies. Using wire cutters, cut the cable converter actuator rods as shown below.

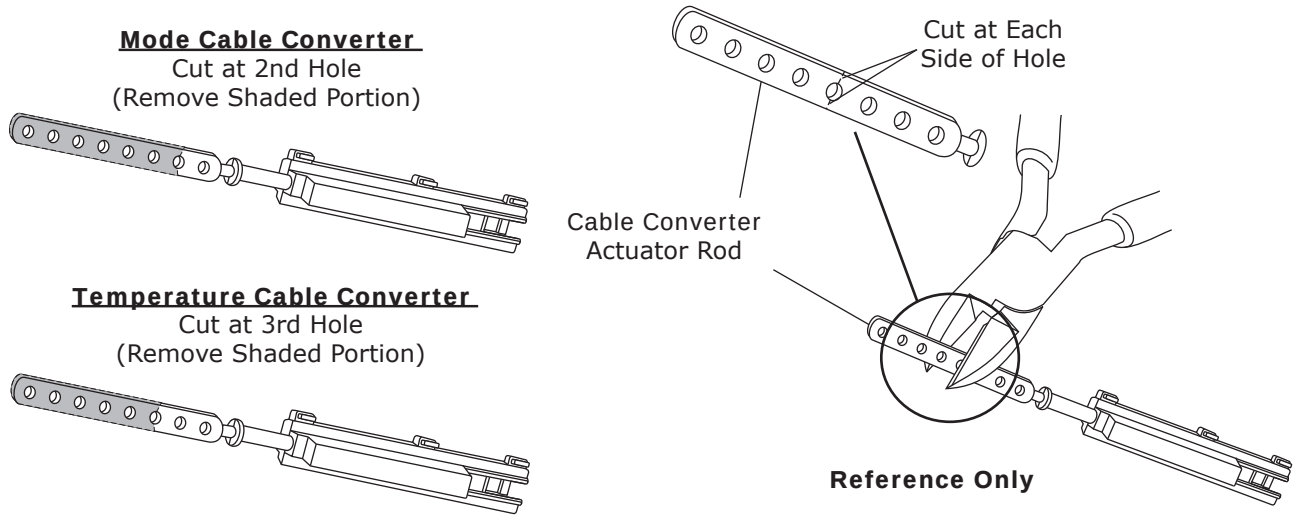

Cable Converter Assembly Mounting Clamp Installation

1. Install the cable converter assembly mounting clamps as shown below. **NOTE: Orient clamps in relation to the (3) housing snaps on the cable converter assembly.**

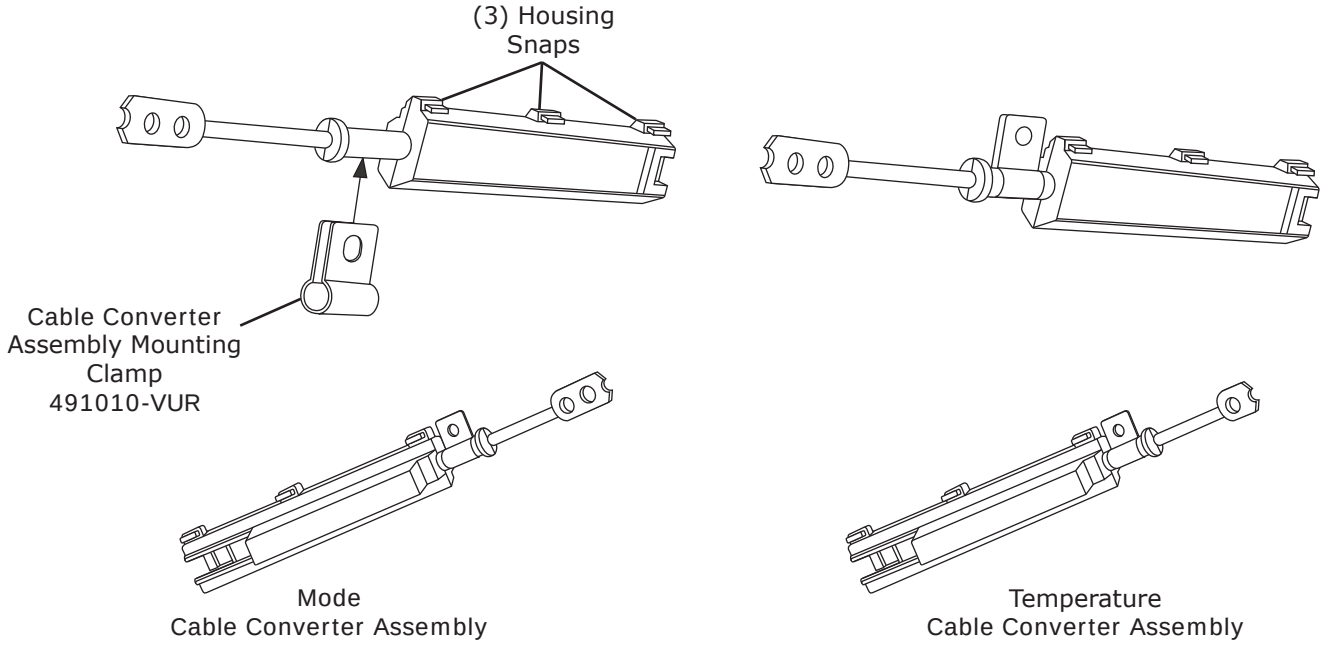

Temperature Cable Converter Installation

1. After cutting the cable converter assembly to the correct length, attach to the temperature control lever using the OEM cable mounting location and cable mounting stud as shown in Photos 14 & 15, below.
2. Secure the temperature cable converter clamp to the control panel using a flat washer and the OEM screw as shown in Photo 15, below.

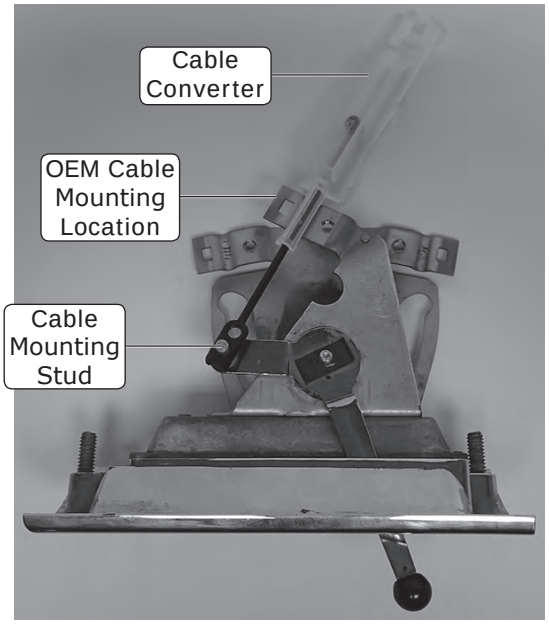

Photo 14

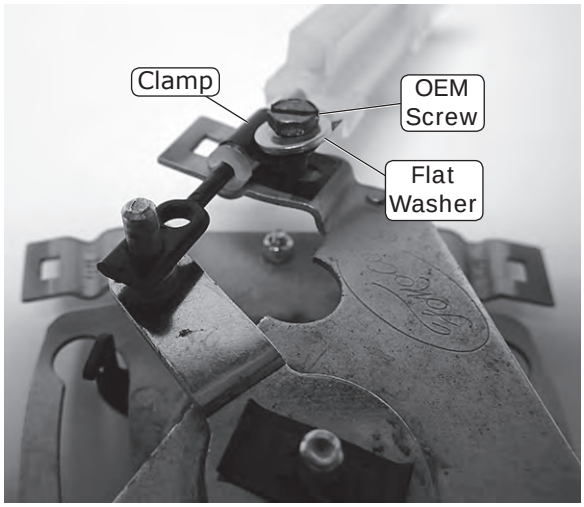

Photo 15

Mode Cable Converter Installation

1. After cutting the cable converter assembly to the correct length, roll the open hole of the mode cable converter over the mode control lever end as shown in Photo 16, below.
2. Secure the mode cable converter clamp to the control panel using a flat washer and the OEM screw as shown in Photo 17, below.

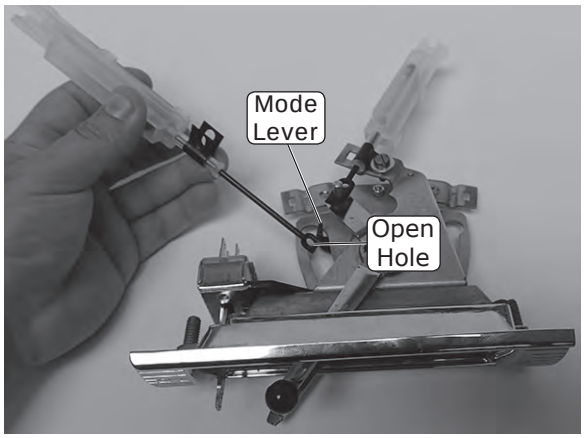

Photo 16

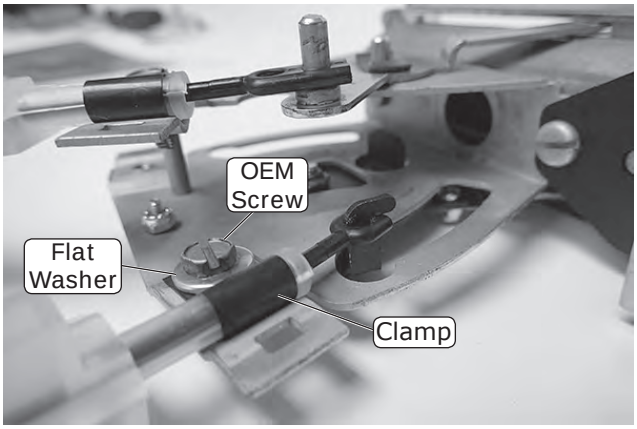

Photo 17

Blower Switch Installation

1. Using the OEM screw, attach the blower switch to the original blower switch location. **NOTE: The blower switch bracket has been slotted to allow for proper alignment. Make sure to align the blower switch lever with the center of the control panel bezel slot before tightening as shown in Photo 18, below.**

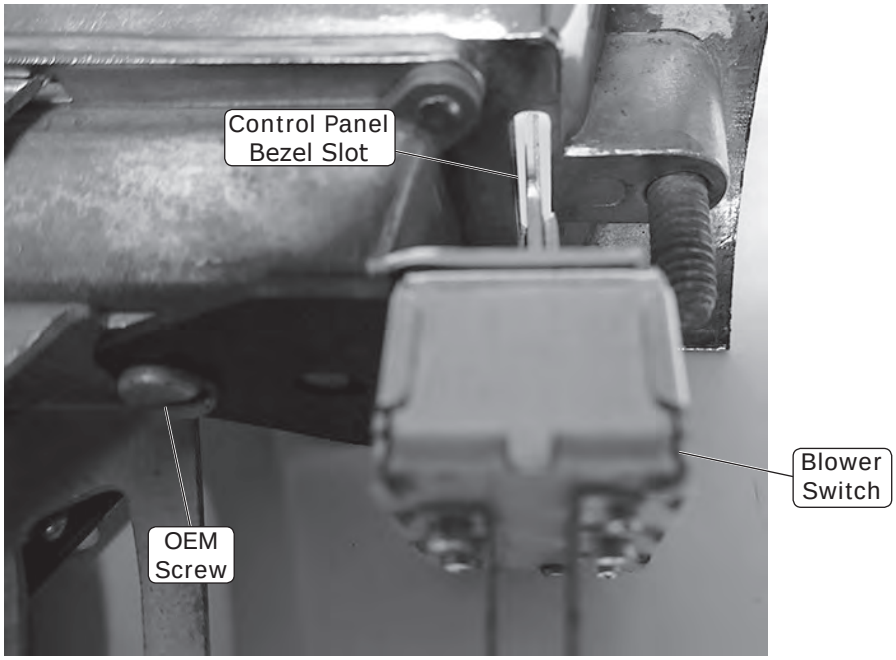

Photo 18

Blower Switch PC Board Installation

1. Locate the blower switch PC board and install on the blower switch as shown in Photo 19, below. **NOTE: Be sure to properly align all connectors, and firmly press board to switch until all connectors are fully seated.**

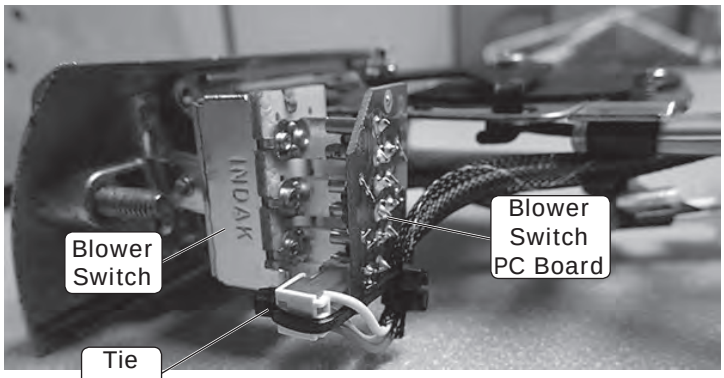

Photo 19

Control Harness Installation

1. Locate the control panel wiring harness, and plug the corresponding wires into the correct cable converter assembly as shown in Photo 20, below.
2. Once the wires are correctly plugged into each cable converter assembly, secure the wires to the cable converter assembly using the supplied tie wraps. **NOTE: The tie wrap must be located between the end of the wire jacket and the step in the cable converter housing, forcing a bend in each wire as it passes over the step in the cable converter housing. The head of the tie wrap must fall on the edge of the housing to remain tight. Ensure that the tie wraps are tight enough that the wires cannot move.**
3. Secure blower switch plug and harness by inserting a tie wrap through the wires in the head of the white/green plug, and tie wrap in place around the PC board, locking the plug in place as shown in Photo 19, above. **NOTE: Be careful not to overtighten, as this could cause damage to the PC board or plug.**

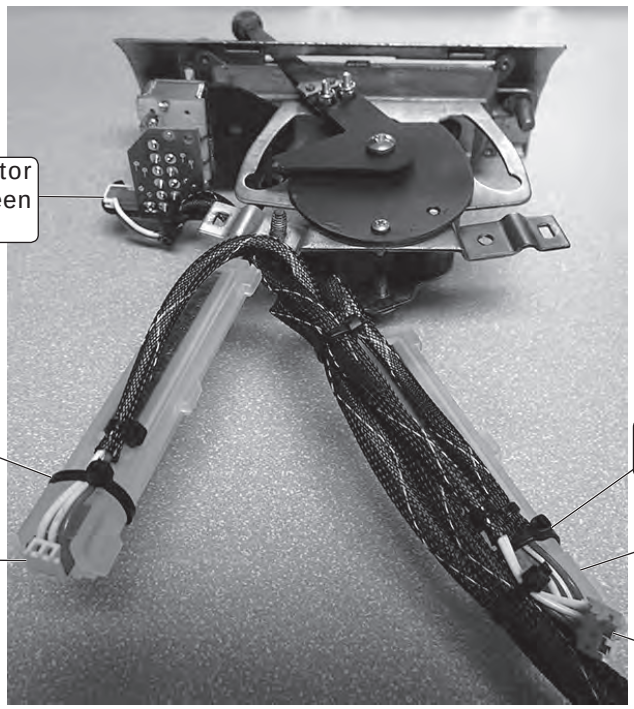

Photo 20

Control Harness Final Step

1. Using the supplied tie wraps, tie the wires to the control panel as shown in Photo 21, below. Confirm that the wires are secured and do not interfere with lever operation or the cable converter assembly.

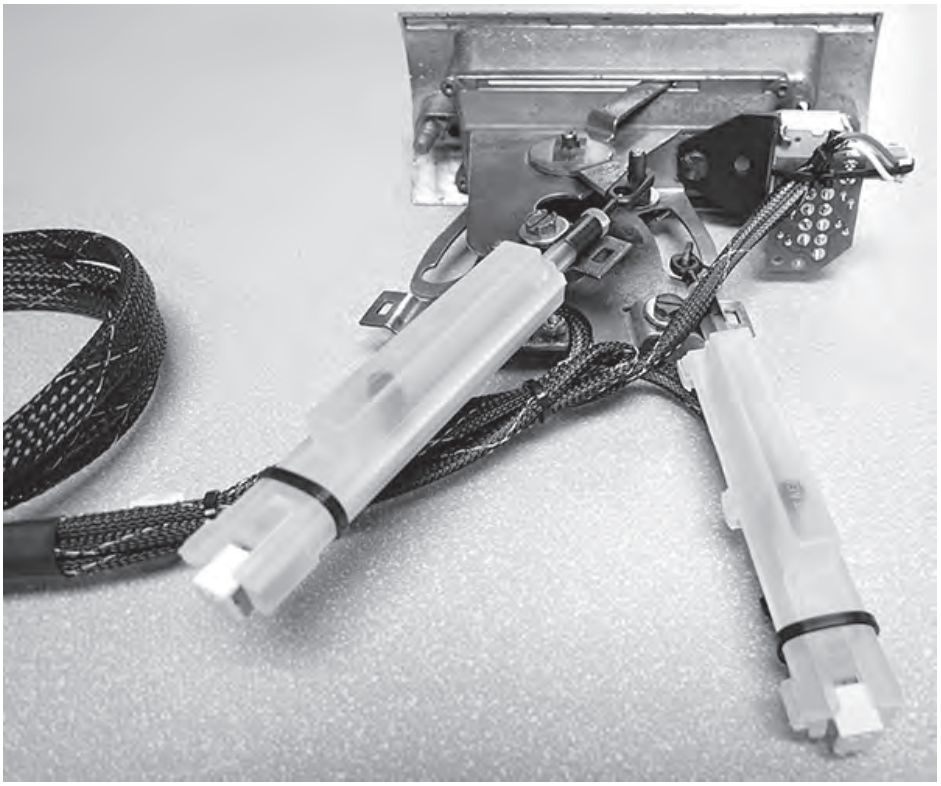

Photo 21

Control Panel Reinstallation

1. Reinstall control panel knobs.
2. Reinstall control panel into dash using previously removed 1/4-20 OEM nuts. **NOTE: Be mindful of cable converter clearance during installation.**

Final Steps

1. Plug the wiring harnesses into the ECU module on the sub case.
2. Wire according to the wiring diagram on Page 15.
3. Calibration procedure and operation instructions:
   - **A.** Calibrating the control panel will set the range of travel for the cable converters connected to the OEM control panel levers. Performing this procedure will set the limits of the cable converters at their highest and lowest points.
   - **B.** Locate the gray wire with an unused connector in the wiring harness near the cable harness relay. This wire is labeled PROGRAM on the wiring diagram.
   - **C.** It will be necessary to ground the gray wire for approximately five seconds while moving the controls, so it is sometimes helpful to attach one end of the white jumper to the vehicle's ground (for example, the chassis) and have the other end ready to connect to the gray PROGRAM wire when the procedure requires it.
   - **D.** To calibrate the control panel, follow the calibration procedures on Pages 13 & 14.

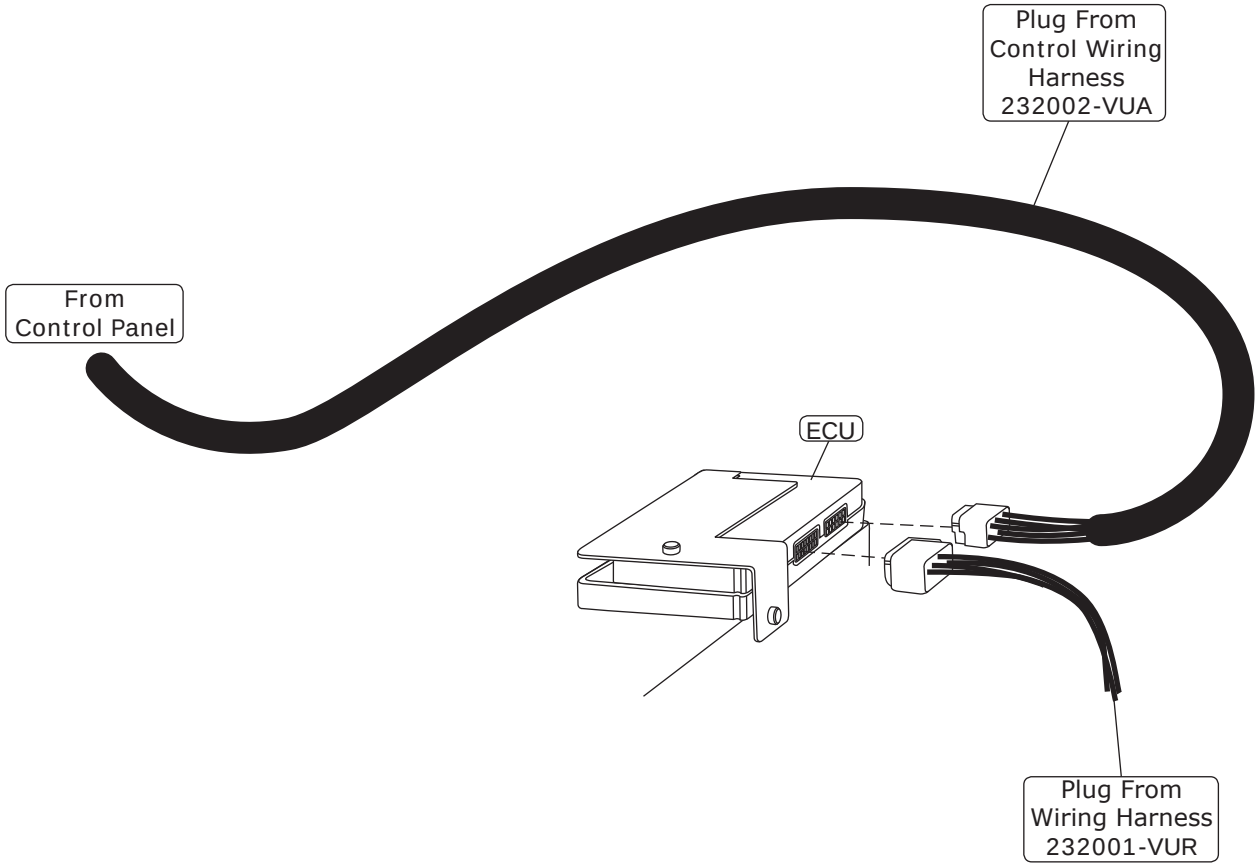

www.vintageair.com

Control Panel Calibration Procedure

On Vintage Air Gen IV systems using factory controls, it is necessary to calibrate the system to your specific control panel. This procedure ensures that the stroke of your control panel levers or knobs is translated into precise control of the fan speed, temperature blend and mode door position. Please carefully read and understand these procedures before beginning. The procedure may be repeated as many times as necessary to get it right.

In preparation for calibration, you will need to attach the supplied white ground jumper wire to a suitable chassis ground. This jumper wire must be easily connected to the gray programming wire located in the main Gen IV wiring harness next to the relays. During the calibration procedure, you will connect the white jumper to the gray program wire, which will “teach” the Gen IV ECU the upper limits of the control levers or knobs. The blower will momentarily change speeds, signaling that the upper limits have been “learned”. You will move the levers or knobs to opposite extreme positions of their travel and then disconnect the white jumper. The blower will again change speeds, signaling that the lower limits have been learned and that the calibration procedure is complete.

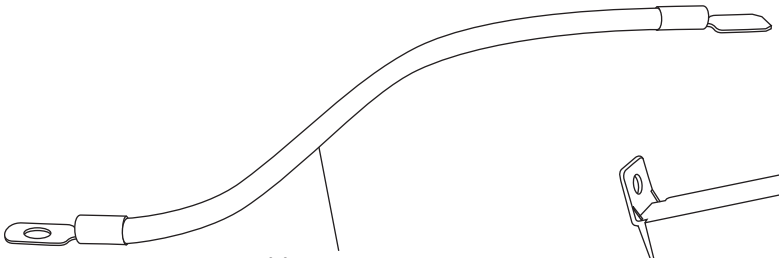

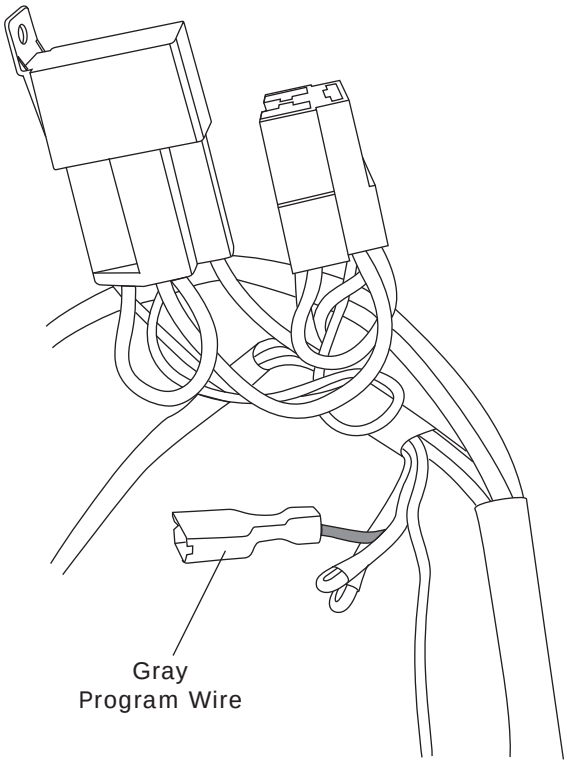

Control Panel Calibration Procedure (Cont.)

1. Turn on the ignition switch (Do not start the engine).

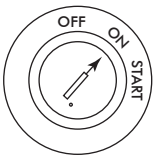

2. Move the control levers/knobs to the position shown.

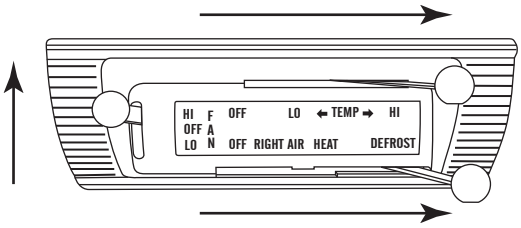

3. Connect the white jumper wire to the gray program wire. Wait for the blower speed to change (Approximately 5 seconds).

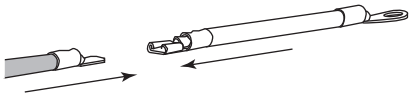

4. Move the control levers/knobs to the positions shown.

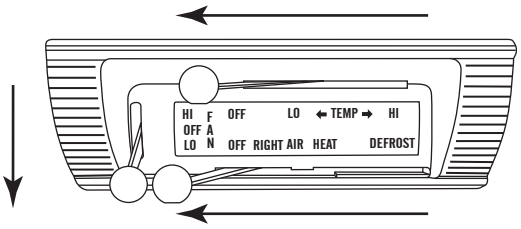

5. Disconnect the white jumper wire from the gray program wire. The blower speed will change, indicating completion of the calibration procedure.

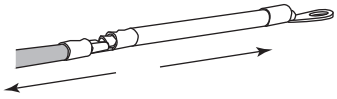

6. Confirm proper operation of controls. Repeat procedure if necessary. When finished, tape over program wire connector with electrical tape to prevent accidental contact with chassis ground.

Wiring Diagram

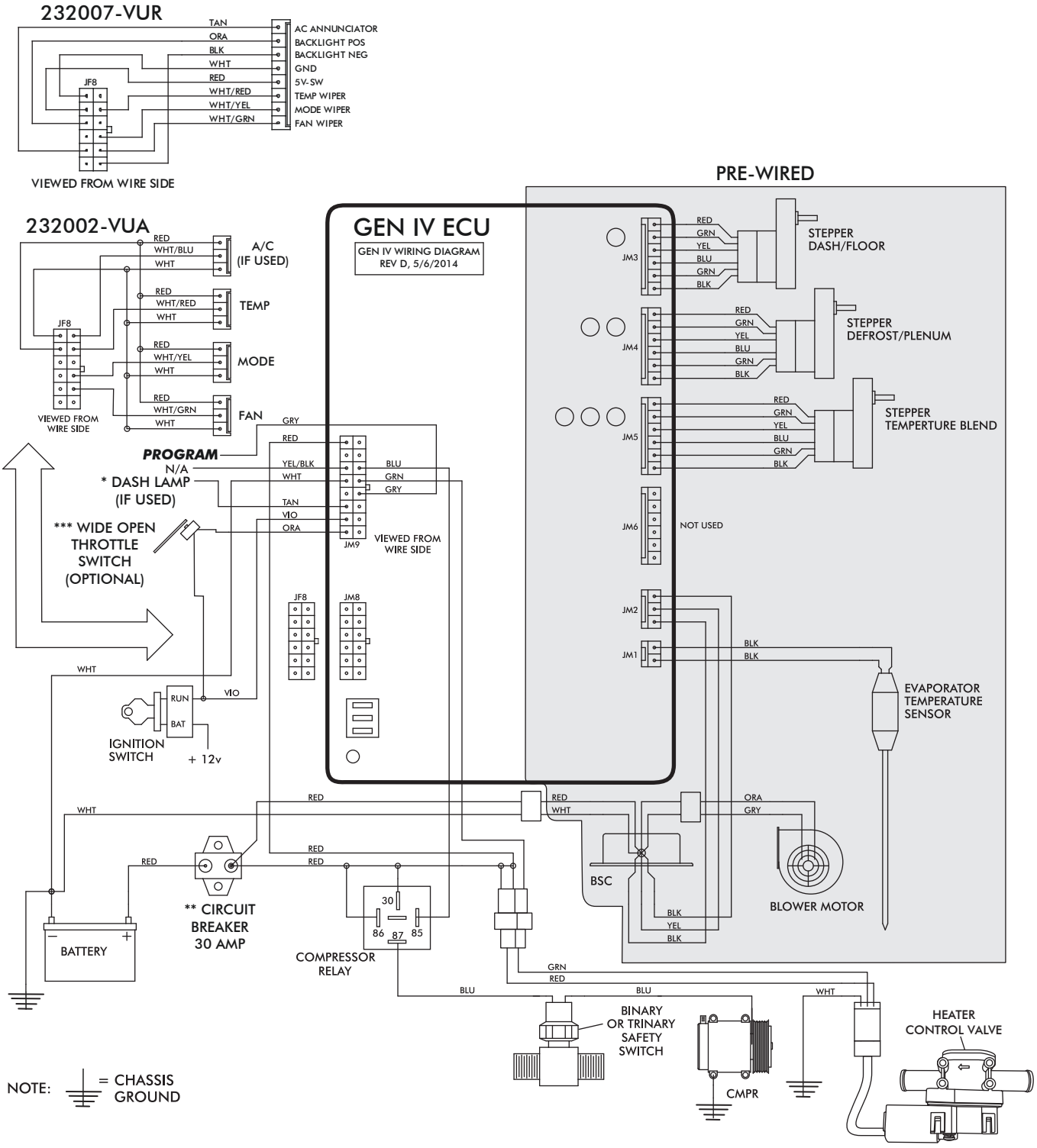

- **Dash Lamp Is Used Only With Type 232007-VUR Harness.**
- **Warning: Always Mount Circuit Breaker As Close to the Battery As Possible. (NOTE: Wire Between Battery and Circuit Breaker Is Unprotected and Should Be Carefully Routed to Avoid a Short Circuit).**
- **Wide Open Throttle Switch Contacts Close Only at Full Throttle, Which Disables A/C Compressor.**

Operation of Controls

On Gen IV systems with three lever/knob controls, the temperature control toggles between heat and A/C operations. To activate A/C, move the temperature lever/knob all the way to cold and then back it off to the desired vent temperature. For heat operation, move the temperature lever/knob all the way to hot and then adjust to the desired vent temperature. The blower will momentarily change speed, each time you toggle between operations, to indicate the change. **NOTE: For proper control panel function, refer to control panel instructions for calibration procedure.**

Blower Speed
This lever/knob controls blower speed, from OFF to HI.

Mode Control
This lever/knob controls the mode positions, from DASH to FLOOR to DEFROST, with a blend in between.

Temperature Control
This lever/knob controls the temperature, from HOT to COLD.

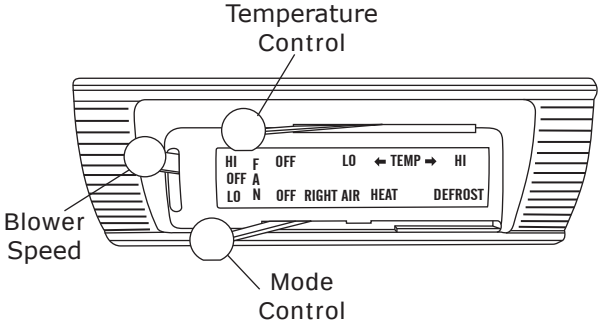

A/C Operation

Blower Speed
Adjust to desired speed.

Mode Control
Adjust to desired mode position (DASH position recommended).

Temperature Control
For A/C operation, adjust to coldest position to engage compressor (Adjust between HOT and COLD to reach desired temperature).

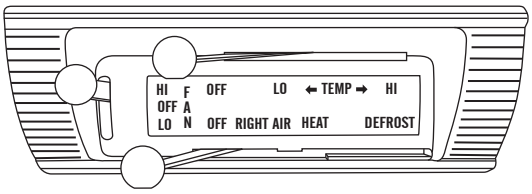

Heat Operation

Blower Speed
Adjust to desired speed.

Mode Control
Adjust to desired mode position (FLOOR position recommended).

Temperature Control
For maximum heating, adjust to hottest position (Adjust between HOT and COLD to reach desired temperature).

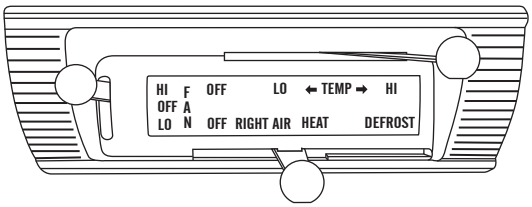

Defrost/De-fog Operation

Blower Speed
Adjust to desired speed.

Temperature Control
Adjust to desired temperature.

Mode Control
Adjust to DEFROST position for maximum defrost, or between FLOOR and DEFROST positions for a bi-level blend (Compressor is automatically engaged).

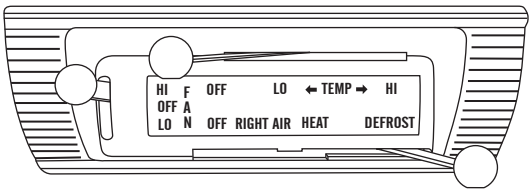

www.vintageair.com

Packing List:
Control Panel Kit (473150)
1956 Ford Passenger Car

No.	Qty.	Part No.	Description	
1.	1	642058	Switch Assembly, Control Panel Blower	_____
2.	1	642056	Bracket, Mode Plate	_____
3.	1	642055	Bracket, Mode Lever	_____
4.	2	112002-SUA	Cable Converter Assembly	_____
5.	2	491010-VUR	Clamp, Cable Converter	_____
6.	1	49705-VUI	Spacer, 1/8” Nylon	_____
7.	2	18123-VUB	Washer, 3/16” x 1/2”, Flat	_____
8.	1	18250-VUB	Screw, 10-32 x 1/2”	_____
9.	1	18147-VUB	Locknut, 10-32 Nylon	_____
10.	3	18413-VUB	Screw, 4-40 x 3/8”	_____
11.	3	18412-VUB	Nut, 4-40 Nyloc	_____
12.	1	246110-PUA	PC Board Assembly, 3-Speed Blower Switch	_____
13.	1	232002-VUA	Control Harness, Gen IV Universal	_____
14.	5	21301-VUP	Tie Wrap, 4”	_____
15.	1	231520	Ground Wire	_____

Checked By: _____
Packed By: _____
Date: _____